EAST RIO HONDO WATER SUPPLY CORPORATION
NON-STANDARD SUBDIVISION SERVICE APPLICATION

Date: _____ Applicant's Legal Name: _____

If Applicant is an entity, provide a **Point of Contact (name and title):**
_____

Applicant's Address: _____

Mailing Address: _____

Phone Number: _____ Cellular Number: _____

Email Address: _____ Total Acreage:_____

Deed Instrument No.: _____ Deed Vol.: _____ Deed Page #: _____

Proposed Subdivision Name: _____ # of Proposed Lots: _____

Engineer (if applicable): _____

Engineer Phone No.: _____ Engineering Firm: _____

Engineer Email Address:_____

Legal Description of Property and Directions from Nearest Highway Intersection:

_____

Investigation for Fire Flow? If yes, indicate flow needed:_____

Special Service Needs or Conditions: _____

Applicant's Signature: _____

NOTE: If all items required below are not submitted and approved by ERHWSC staff within six months of initial submission; this application will become void. In order to continue with the subdivision service investigation, a new Non-standard Subdivision Service Application and $2,500.00 fee must be submitted to ERHWSC.

The following items must be submitted to ERHWSC before this application will be processed: 1) payment of an initial $2,500.00 subdivision service investigation fee; 2) Deed to property; 3) two blue-line copies of the proposed construction plans, if applicable, otherwise two copies of the preliminary plat and; 4) two copies of the proposed final plat. ERHWSC will complete a site assessment, if a hydraulic analysis is required, an additional fee of $500 minimum will be due. ERHWSC will evaluate the proposed development and determine minimum line sizes for system extensions to and within the proposed development. Additional service investigation fees and all tap related fees will be determined along with legal requirements. This will be summarized for the developer in a Uniform Non-standard Service Agreement, which must be executed and completed prior to any construction.

(For Office Use Only)
Payment of initial subdivision service investigation fee has been paid Yes / No (Circle One)

East Rio Hondo Water Supply Corporation

206 Industrial Pkwy. * P.O. Box 621* Rio Hondo, Texas 78583*www.erhwsc.com*Phone (956) 748-3633 Fax 748-3179

"This institution is an equal opportunity provider and employer"

The following are the minimum requirements for developers of subdivisions/developments requesting service from East Rio Hondo Water Supply Corporation (ERHWSC). Service will NOT be provided to the subdivision/development if these requirements are not met:

1. Completely filled out Non-standard Subdivision Application
2. $2,500.00 Subdivision Investigation Fee
3. Minimum $500.00 Investigation Fee per hydraulic analysis. ERHWSC will perform a hydraulic analysis of the proposed subdivision/development to determine minimum water line sizes or system extensions and inside of proposed subdivision/development or if fire flow is required.
4. 2 Blue-line copies of the proposed Final Subdivision Plat
5. 2-Blue-line copies of the proposed Construction Plans and Preliminary Plat. If construction is necessary, ERHWSC's Subdivision Specifications/Requirements can be found by visiting https://erhwsc.com/developers.
6. Copy of Deed (Proof of ownership of land to be subdivided)
7. Executed ERHWSC Right of Way Easement signed by current property owner(s) for property to be subdivided.
8. ERHWSC will provide developer with a Uniform Non-Standard Water Service Agreement outlining the subdivision requirements. This Agreement must be approved by the ERHWSC Board of Directors and executed by the Developer.
9. 2-Mylar Copies of completed Final Subdivision Plat with all signatures.
10. All fees must be paid ($4,200.00 / lot (service unit) if property, Development, or Subdivision is within the bounds of an irrigation district, and subject to Texas Water Code, Subchapter O water rights conversion process; $4,751.94 / lot (service unit) if property, Development, or Subdivision is **not** subject to Texas Water Code, Subchapter O water rights conversion process) before Final Plat is signed by ERHWSC.
11. If construction was necessary, as-builts of construction in PDF, AutoCAD, and on mylar paper (24"X36") must be submitted to ERHWSC upon completion.
12. Copy of recorded plats in PDF, AutoCAD, and on mylar paper must be submitted to ERHWSC.

Fees included:

$315.00 Membership Fee
$535.00 Meter Installation Fee
$2,000.00 Impact Fee
$1,350.00 Water Rights Fee (subject to Texas Water Code, Subchapter O water rights conversion process); or
$1,901.94 Water Rights Fee (**not** subject to Texas Water Code, Subchapter O water rights conversion process)

East Rio Hondo Water Supply Corporation

206 Industrial Pkwy. * P.O. Box 621* Rio Hondo, Texas 78583*www.erhwsc.com*Phone (956) 748-3633 Fax 748-3179

"This institution is an equal opportunity provider and employer"

The following language should be noted on plat under NOTES or DEED RESTRICTIONS:

The East Rio Hondo Water Supply Corporation (ERHWSC) Utility Easements are exclusive and shall not be fenced. ERHWSC will remove said fences, obstructions, buildings, plantings, or other encroachments without notice, at expense to the Landowner, with no liability to ERHWSC.

The Signature block should read as follows:

This plat of XYZ Subdivision has been considered and approved by East Rio Hondo Water Supply Corporation ("ERHWSC") of Cameron County, Texas. ERHWSC hereby certifies that potable water is available to the subdivision in accordance with ERHWSC's Uniform Subdivision Non-Standard Water Service Agreement executed by _____, ERHWSC's regulations, and payment of appropriate fees. Any modification to this plat after this date shall cause this approval to become void.

Dated this _____ day of _____, 20___

Approved by: _____
General Manager

East Rio Hondo Water Supply Corporation

206 Industrial Parkway • P.O. Box 621 • Rio Hondo, Texas 78583

"This Institution is an Equal Opportunity Provider and Employer"

SUBDIVISION SPECIFICATIONS/REQUIREMENTS

Date: March 28, 2022

WATER DISTRBUTION REQUIREMENTS

1. All water lines will be placed in a 15-ft (in water CCN only areas) or 20-ft private non-fenced easement adjacent to the road right of way. This easement will be deeded to East Rio Hondo Water Supply Corporation (ERHWSC) via a written right-of-way easement agreement for the subdivision and drawn on the plat as well. Water lines will not be laid in road right of ways except for crossings.

2. All materials to be used on a new subdivision will be inspected by ERHWSC before installation. This includes pipe, valves, fittings, meter boxes, copper tubing, etc. All fittings, valves, taps, and casings must be observed by ERHWSC before burying, or the contractor will dig them up for inspection, with no exceptions. Work done on weekend must be left open for Monday inspection or uncovered later. ERHWSC can be notified of construction activities needing inspection at (956)-748-~~3143 or~~ 3633. Inspections will be conducted within 24 hours of notification. Subdivider or Developer will pay for all material testing (geotechnical) and professional inspection as required and/or conducted by ERHWSC for the subdivision or development.

3. All water mains will be Ultra-Blue Class 200 or PVC rubber gasketed pipe (ASTM F1483) or Class 200 SDR 21, unless otherwise allowed by ERHWSC. Pipe in casing will be Yelo-mine Certa-Lok pressure pipe with Ranger II casing skids, unless otherwise allowed by ERHWSC. Pipe must not be older than 12 months at time of installation and must be WHITE in color with no sun discoloration. Water mains on developments and subdivisions will be 6" minimum diameter, and adjacent to through County roads will be 8" minimum diameter pipe. Subdivisions or developments with fire hydrants will utilize 8" minimum diameter pipe.

4. All fittings 4-in and smaller may be Harco, or preapproved equal, rubber gasketed, Class 200, white, PVC fittings, or ductile iron Class 350 mechanical joint fittings. This includes tees, 90° bends, 45° bends, and 22.5° bends. End caps for flush valves on 4, 6, and 8-in pipe will be Class 350 ductile iron mechanical joint with 2-in threaded IPS center outlet. All fittings 6-in and larger will be Class 350 ductile iron fittings with connections as specified on each project. Ductile iron fittings are to be made in the U.S.A. for quality assurance or as otherwise approved by ERHWSC. Fittings may not be made in China. T-bolts on mechanical joints must be Corten. Mechanical joint t-bolts, and bolts and nuts must be greased. Flanged bolts must be 304 or 316 SS. The entire fitting must be wrapped in 6-mil polyethylene plastic, duct taped, and tied with nylon string over the tape. Valve clusters will be assembled and inspected above ground before installation on the pipe.

5. Valves will be Mueller A-2360 resilient wedge gate valves. All exterior bolts must be 304 or 316 stainless steel (SS). All mechanical joint t-bolts and nuts must be

coated in grease. Tapping valves will be mechanical joint by flange. 2-in flush valves will be FPT X FPT and of same model as above. Flange bolts and nuts must be 304 or 316 SS. All valves must be completely wrapped in 6-mil polyethylene plastic excluding the operating nut. The plastic must be duct taped shut and tied with nylon string.

6. Valves and fittings must be thrust-blocked with concrete. Joint restraint will be required where necessary.

7. The end of each line will have a flush assembly or a flush hydrant. Flush assemblies will be approved by ERHWSC before installation. Two-inch or four-inch flush assemblies may be specified. For 2-in flush valves, caps with 2-in threaded outlet on the end of PVC piping must be secured with Mega-Lug, All-Grip or approved equal. All horizontal piping on the flush valve and the lower 90° bend will be brass. Upper 90° bends and 72-inch vertical 2-inch piping will be galvanized pipe. The flush valve assembly must have a 2-in close brass nipple with PVC cap at the discharge end. Engineering design must incorporate minimizing dead-end lines.

8. All through-road, drain-ditch, and highway crossings will be cased with steel pipe. Pipe will be 0.375-in wall thickness for state highway, railroad, and drain-ditch/canal crossings, and 0.25-in wall thickness for city and county road crossings. All piping inside of steel casing must be wrapped with Ranger II casing spacers (plastic skids) at every 6 feet. Road or highway service crossings will be with 2” Yelo-mine Certa-Lok PVC pressure pipe inside 4” SDR 35 casing. All casing must be approved for use by ERHWSC before installation.

9. Only single water connections will be used (No double service connections). All taps to the water main will be at least 5’ from all power poles. Taps will be at least 6’ apart. All taps will be at 3 or 9 o’clock on the main.

10. All tapping saddles will be brass ¾-in or 1-in IPS, Ford S71 or equal as approved by ERHWSC.

11. Corp stops will be ¾-in or 1-in Ford F-1100 or equal as approved by ERHWSC.

12. Angle stops will be Ford Angle Ball Meter Valve BA43-232W with locking top or equal as approved by ERHWSC.

13. Tubing will be ¾-in high density polyethylene.

14. Meter boxes will be black plastic, DFW model D1200-B/O with plastic overlapping lid with cast-iron reader. Pin support on reader will be 304 or 316 SS. ERHWSC will approve solid blue plastic overlapping lids with no cast-iron reader in Automatic Meter Reading zoned areas. Meter boxes will be located a distance from the property line as indicated on the ERHWSC Waterline Detail Sheet, and may not lay in dual utility easements.

15. Valve boxes will be cast iron and made in U.S.A. or as otherwise approved on individual case basis by ERHWSC. Boxes may not be made in China. Extensions may be made with PVC pipe approved by ERHWSC. Valve boxes will be set flush to the ground on ERHWSC easement and 12-in below ground on state or county property and soil beneath and around the valve box must be compacted to prevent settling.

16. Valve markers will be placed in concrete at the right of way/private property interface for each valve. Markers will be provided by ERHWSC. Lettering must face the road.

17. Meter boxes will be set with the lid 1.5-in above the ground and soil beneath the meter box must be compacted to prevent settling.

18. All water mains will have at least 48-in of cover on the pipe in ERHWSC easement. On state highway or county road crossings, the steel casing must have 48-in of cover minimum under the pavement and 24-in at the centerline of the ditch. Sand bedding will be provided 6-in minimum on all sides of the pipe. A 6-in bedding will be placed in the trench before the pipe. The pipe is then laid and sand backfill is manually tamped under the pipe haunch up to the spring line. From the spring line up, sand backfill is placed in 6-in lifts and manually tamped. 6-in blue and silver Detectatape & Markline (tape) as manufactured by Allen Systems will be buried, centered on the pipe, with no more than 18-in of cover on the tape. The trench must be water-jetted after completion before final approval.

19. Line extension taps on all mains larger than 2-in will be made using all stainless steel tapping sleeve such as JCM Model 452 or cutting in a ductile iron tee. Flange bolts and nuts between the gate valve and tapping sleeve or tee will be 304 or 316SS. ERHWSC will specify use of a cut-in tee or stainless steel tapping sleeve for each tap. ERHWSC will provide all cut-ins and taps on its existing distribution mains or be continually present on site when an experienced approved contractor does the work.

20. Upon completion, the new water system will be filled from the existing ERHWSC distribution system. The existing system must be tapped with a brass saddle with 2-in discharge and gate valve or corporation stop. Water will flow to the new system through a 2-in backflow prevention device provided by ERHWSC. Water will enter the new pipe through a 2-in valve/corporation stop and brass saddle. The new system will be tested at 125 psi overnight (14 hour minimum). The pressure loss shall not exceed 5.0 psi. The pressurization equipment must be positioned downstream of the backflow preventer. A pressure recording chart and gauge will be located on a system flush valve or meter service. Lines larger than 12” may be filled with a larger tap and backflow preventer to be approved by ERHWSC.

21. After the pressure test is passed, the new system must be hyperchlorinated to 50 ppm. After 24 hours contact time, the system must be flushed and bacteriological samples collected by ERHWSC personnel at each flush valve or every 1000-ft, whichever is greater. ERHWSC must observe hyperchlorination and flushing.

22. Upon receipt of non-detect bacteriological results, and all other requirements noted above are met, ERHWSC will provide the subdivider with certification that the subdivision has passed all requirements.

23. Unless ERHWSC administers the construction contract for the subdivision, the subdivider will be responsible for all meter taps and boxes until each lot is sold. At that time the buyer will become responsible. If the Subdivider contracts the work, he/she will provide ERHWSC a one-year warranty on the system. If this warranty is not met in an expedient manner, service will not be provided to any lots until the subdivision owner clears all debts and penalties to ERHWSC for system repairs. Contractors must be approved by ERHWSC before bidding construction work and must list ERHWSC as additional insured on their liability and automobile policies.

24. If the property being developed lays in any city's extra territorial jurisdiction (ETJ) or city limits, the city's written comments on the subdivision/development must be obtained before submission of the plat to ERHWSC.

25. The developer must execute a Uniform Subdivision Non-standard Service Agreement with ERHWSC, which includes terms of the 30-year service contract in accordance with the Texas Water Development Board Model Subdivision Rules (if required), and pay all fees and/or provide required water rights before any construction may begin. Both contracts will be contingent upon County approval of the subdivision.

26. Mueller Super Centurion 250 mechanical joint (MJ) fire hydrants, isolated via a 6" Mueller Flange by MJ gate valve, will be allowed on the subdivision if painted red with a white bonnet (cap).

SANITARY SEWER REQUIREMENTS

1. All sanitary sewer lines will be placed in a 20-ft private non-fenced easement adjacent to the road right of way. This easement will be deeded to East Rio Hondo Water Supply Corporation (ERHWSC) via a written right-of-way easement agreement for the subdivision and drawn and dedicated on the plat as well. Sanitary sewer lines will not be laid in road right of ways except for crossings. Only single wastewater service connections will be used (No combined service connections before the mainline sewer tap).

2. All materials to be used on a new subdivision will be inspected by ERHWSC before installation. This includes pipe, manholes, valves, fittings, wetwells, pumps controls, all electrical components, etc. All manholes, wetwells, fittings, air release valves, cleanouts, and casings must be observed by ERHWSC before bury, or the contractor will excavate for inspection, with no exceptions. Work done on weekend must be left open for Monday inspection or uncovered later, or ERHWSC must be fully reimbursed for weekend overtime inspection hours. ERHWSC can be notified of construction activities needing inspection at (956)-247-7741 or 956-748-3633. Inspections will typically be conducted within 24 hours of notification. Subdivider or Developer will pay for all material testing (geotechnical) and professional inspection as required and/or conducted by ERHWSC for the subdivision or development.

3. All sanitary sewer gravity lines shall conform to ASTM D-3034 and be SDR-35 or SDR-26 or ASTM F-679 and be PS-46, unless otherwise allowed or requested by ERHWSC. Joints shall meet the requirements of ASTM D-3212. Joint seals shall be compression type rubber gaskets in compliance with the requirements of ASTM F-477. Pipe shall be installed in accordance with ASTM D-2321 and the manufacturer's recommendations. Gravity sewer pipe must not be older than 12 months at time of installation and must be GREEN in color with no sun discoloration.

4. Pipe and fittings for property service connections shall be installed using Polyvinyl Chloride Pipe (PVC). The pipe for service lines crossing potable water lines shall be SDR-26 and shall be manufactured in accordance with ASTM D-3034 with compression type rubber gasket joints conforming to ASTM D-1869. Service connection pipes and fittings which do not cross potable waterlines will be SDR-35.

5. All sanitary sewer pressure mains (force mains) shall conform to ASTM D-1784 and be DR-26 or AWWA C-900. All sanitary sewer pressure mains must not be older than 12 months at time of installation and must be GREEN in color with no sun discoloration. PVC pressure pipe within lift station wetwells and valve vaults shall be Yelo-mine Certa-Lok SDR21 Class 200 (ASTM D2241) RJ Restrained Joint PVC Pipe and yellow in color. Polyvinyl chloride pipe for directional bored force mains shall conform to Fusible AWWA C-900 DR-25 PVC or Yelo-mine Certa-Lok PVC pressure pipe. Pipe within casing shall be the same Yelo-mine Certa-Lok pressure pipe as described above with all PVC casing skid spacers manufactured by Ranger II or approved equal (no metal components allowed).

6. Fiberglass manholes shall be a one-piece monolithic designed unit constructed of glass-fiber reinforced polyester (fiberglass) meeting H-20 wheel load (minimum 16,000 pounds dynamic wheel load) as manufactured by Containment Solutions, Inc. Fiberglass manholes shall be manufactured in accordance with ASTM D-3753 and any applicable Texas Administrative Code (TAC) rules to include: 30 TAC 213.5 and design criteria for sewerage systems 30 TAC 217.53, 30 TAC 217.54, 30 TAC 217.54 and 30 TAC 217.55, or any revisions thereto as applicable. Manholes are required to have a minimum of ½ inch thick resin fiber reinforced bottom and a minimum 3-inch anti-flotation ring. Manhole inverts and benches shall be factory installed utilizing non-corrosive materials encapsulated in fiberglass with a minimum 1/4" thickness. The manway reducing cone section shall be centered on the manhole barrel and must provide a bearing surface on which a standard ring and cover may be supported and adjusted to grade. The reducer shall be joined to the barrel section at the factory with resin and glass fiber reinforcement, thus providing required monolithic design to prevent infiltration and/or exfiltration through the manhole.

Connections for sewer pipeline and drop connections sizes 4" - 12" shall be made by means of Inserta-Tee watertight compression connection on existing manholes. On new construction said connections shall be factory installed. Installation shall be in strict accordance with manufacturer's written instructions utilizing installation equipment approved for use by the manufacturer of the Inserta-Tee fitting.

Manholes shall be installed with a 12-inch thick (including the 3-inches of concrete above the anti-flotation ring), 4,000-psi concrete pad with No. 6 rebar at 6-inch on-center-each-way (OCEW), extending outside the manhole wall by a minimum of 12" in all locations. Concrete pads shall be installed on a 12" thick crushed limestone leveling course (if necessary) on top of a single mat of biaxial geogrid. Larger concrete pads will be required for larger diameter manholes and may be necessary to meet buoyancy requirements.

7. Manhole cover and frame shall be a 30" CAP ONE-30 composite ring and cover with 316 stainless steel 4-bolt system for a water-tight seal.

To bring the manhole to finished grade and provide support for ring and cover, construct chimney using HDPE rings by Lad Tech or approved equal and install as per manufacturer's requirements. Butyl mastic MUST be used between the grade rings as per manufacturer's recommendation.

Manhole concrete tops shall be a centered 6-foot x 6-foot poured monolithically with a 6-inch-thick manhole concrete collar extending 6-inches below the manhole cone-barrel joint. Concrete tops shall be 3000-psi concrete pad with No. 5 rebar at 8-inches OCEW. ERHWSC staff or engineering inspection must approve forms and reinforcement before concrete pours and must be present during concrete pours.

8. Force main isolation valves will be Crispen K-flo Series 800 ball-type plug valves, for wastewater applications. All exterior bolts must be 304 or 316 stainless steel (SS). All mechanical joint t-bolts and nuts must be coated in grease. Bellow ground installations will be mechanical joint connections. Above ground installations will be flanged connections. All valves must be completely wrapped in 8-mil polyethylene plastic excluding the operating nut. The plastic must be duct taped shut and tied with nylon string.

9. Valves and fittings must be thrust-blocked with concrete. Joint restraint will be required where necessary. Valve boxes will be cast iron and made in the U.S.A. or as approved by ERHWSC. Boxes made in China are not accepted. Extensions may be made with PVC pipe approved by ERHWSC. Valve boxes will be set flush to the ground on ERHWSC easement and 12-in below ground on state or county property. Standard ERHWSC valve markers will be placed in concrete at the edge of the right of way for each valve. Markers will be provided by ERHWSC. Lettering must face the road.

10. All force main road, drain-ditch, and highway crossings will be cased with steel pipe. Pipe will be 0.375-in wall thickness for state highway and drain-ditch/canal crossings, and 0.25-in wall thickness for city and county road crossings. All piping inside of steel casing shall be Yelomine Certa-Lok pipe with Ranger II casing spacers (plastic skids) at every 6 feet and PSI Model “C” or “W” Wrap-around end seals. All casing must be approved for use by ERHWSC before installation.

11. All gravity sewers and force mains will have at least 48-in of cover on the pipe in ERHWSC easement. On state highway or county road crossings, the steel casing must have 48-in of cover minimum under the pavement and 24-in at the flowline of the ditch. Sand bedding will be provided 6-inch minimum on all sides of the pipe or as per manufacturer’s recommendations, if greater. A 6-inch bedding will be placed in the trench before the pipe. The pipe is then laid and sand backfill is manually tamped under the pipe haunch up to the spring line. From the spring line up, sand backfill is placed in 6-in lifts and manually tamped. A 6-inch-wide green detectable tape with “Sewer” noted on tape will be buried, centered on the pipe, with no more than 18-in of cover on the tape or as per manufacturer’s recommendations.

12. Force main air release valves shall be required at force main high points and on both sides (upstream and downstream) of any drainage canal, irrigation ditch, resaca, or other crossing or structure causing a significant elevation change. Air release valves shall be ARI D025 combination air valve for wastewater and be installed in accordance with ERHWSC Standard Automatic Air Release Valve detail.

13. Force main fittings will be ductile iron, mechanical joint in accordance with ANSI/AWWA C111/A21.11, ANSI/AWWA CI53/A21.53, with a (200) pounds per square inch minimum pressure rating unless otherwise shown or specified. Ductile iron fittings and specials shall be lined on the interior with ceramic epoxy Ceramapure PL90 or equal and coated on the exterior with a bituminous asphaltic coating for corrosion resistivity. Fittings shall be installed with mega-lug or approved equal. Ductile iron

fittings are to be made in the U.S.A. for quality assurance or as otherwise approved by ERHWSC. Fittings may not be made in China. T-bolts on mechanical joints must be Corten. Mechanical joint t-bolts, and bolts and nuts must be greased. Flanged bolts must be 304 or 316 SS. The entire fitting must be wrapped in 6-mil polyethylene plastic, duct taped, and tied with nylon string over the tape. Valve clusters will be assembled and inspected above ground before installation on the pipe.

14. TESTING – All installed sections of the gravity sewer system shall be tested using low air pressure tests and mandrel tests per TCEQ standards. Air testing will achieve two times the value of *T* as per Equation C.3, 30 TAC 217.57, before the loss of 1.0 psi of air pressure. Mandrel testing shall be conducted no sooner than 30 days after installation, backfilling, compacting, and water jetting (flooding) the gravity sewer pipeline trench, nor later than 12 months after installation, backfilling, compacting, and water jetting the gravity sewer pipeline trench. The test results will be used to evaluate materials and construction methods on the pipe line sections, and successful mandrel and air tests shall be mandatory for the acceptance of the lines.

After completion of manhole construction, or rehabilitation, test manholes for water tightness using vacuum testing procedures before pouring the concrete top. The vacuum test will start at 10” of Hg and the two-minute test starts when the pump is off, and the manhole must hold 9” of Hg after two minutes. Manholes shall be tested after installation with grade rings, manhole ring, and all connections (existing and/or proposed) in place.

Additional leakage tests may be requested by ERHWSC at any time to determine whether or not there is infiltration and to assure that the sewer section is substantially watertight.

Upon completion of all testing requirements and prior to final acceptance, all gravity sewer lines shall be cleaned of soil, sand, rocks, solids, grit and other debris, thus improving flow and facilitating television inspection for sewer evaluation. Cleaning includes initial manhole wall washing by high-pressure water jet. Immediately after cleaning, the gravity sewer shall be televised to document the condition of the line. A television inspection report shall be provided on a high-quality video (including audio) MPEG4 format with corresponding location instructions. The electronic video shall be provided on flash-drive or other approved digital format labeled by line segment. ERHWSC reserves the right to have the developer repeat the process until the work is accepted. Any sags creating standing water, damaged gaskets or other deficient installation shall be repaired. Final determination of repairs shall be at the sole discretion of ERHWSC.

Force mains shall be pressure tested for a minimum of 14 hours overnight with a minimum of 125 psi and no pressure loss greater than 5.0 psi.

The Contractor shall furnish all labor and material required to complete all testing and cleaning requirements.

15. LIFT STATIONS – Wastewater lift stations shall be constructed with submersible pumps housed in a fiberglass wet well with reinforced concrete base and top slabs with an above ground valve assembly and electrical rack. The design of the lift station shall be such that the pumping units can be easily removed from the wet well for inspection or service without disconnecting or disturbing the discharge piping.

Wet Well Structure – Wet well structure shall be fabricated with a one-piece fiberglass reinforced polyester wet well, with solid fiberglass bottom, as manufactured by Containment Solutions, Inc. and in accordance with ASTM D 3753. The wet well will be embedded into reinforced concrete top and bottom slabs which extend outside the wet well wall by a minimum of 18" in all directions. Top slabs shall be 8-inches thick above the fiberglass with no loading on the fiberglass wet well. The top slab shall be supported by cement stabilized sand installed between the wet well exterior wall and the entire void created by the site excavation. A 3" sand cushion shall be installed between the top of the fiberglass wet well and the bottom side of the top slab. The bottom slab shall be designed to meet the buoyancy requirements but no less than 12-inches thick. The top slab shall have a finished elevation of at least 18-inches above the elevation of the adjacent roadway crown and at least 24-inches above any 100-year flood plain. The interior floor slab/wet well/wall interface shall be grout filled at a 1:1 slope for a length of 18-inches towards the center of the wet well. The void between the exterior of the wet well after installation and the site excavation shall be back-filled with a mixture of 1.5 sacks of Portland cement to 1 ton of concrete sand or high-quality bank sand (see attached material specifications) and the appropriate amount of potable water. The cement stabilized sand will be installed in the entire excavation area, up to a level of 4-inches below bottom of the top slab (to match the sand cushion beneath the top slab). Each 12" lift of cement-stabilized sand may be compacted manually or water jetted to ensure saturation and sufficient settling. The top slab loading must be carried by the exterior ring of cement stabilized sand and must not vertically load the fiberglass wet well. A top slab extension with separate cold-joint must be provided for the discharge valve header assembly. The cement stabilized sand will taper at the top at an angle not to exceed 20° to the finished site elevation. The cement stabilized sand will have a minimum compaction strength of 100 psi in 48 hours and 250 psi in 7 days. Alternatives to cement stabilized sand are flowable fill (provide engineering design to ERHWSC for approval) or concrete piers extended from each corner of the bottom slab to the top slab with 12" lifts of select fill (see material specifications) to 4" below the final grade of the fiberglass wet well.

Access Hatch - Access hatches, frames and grating shall be of all aluminum construction with hardware, such as hinges, nuts, bolts, locking devices, etc., being 316SS. Manufacturer of access hatches, frames, and grating shall be K&B Steel, Clarksville, TX, or as otherwise approved by ERHWSC. Each access cover shall have a safety latch to hold the cover in an open position. A "safety hatch" type accessory shall be included to provide fall-through and confined space access protection as required by OSHA. Cover frames shall be self-draining type and include provisions for mounting upper guide rail

brackets and cable rack. The hatch opening shall be sized to provide a clear opening to freely remove each pump without maneuvering the pump.

Pump Guide Bars, Cable Rack, & Lifting Chain – Pump guide bars shall be a dual rail 316 stainless steel schedule 40 pipe sized according to the manufacturer's recommendations but, not less than 2 inches. Pump guide bars shall be held in place by upper and lower guide bar supports. Upper guide bar support shall be 316 stainless-steel. Lower guide bar supports shall be an integrally cast boss on the discharge connection and arranged such that the guide bar is held in place by sliding over the boss. Hardware shall not be required in the wet pit to hold the guide bar in place except for intermediate guide bar supports (316SS) for guide bars lengths of more than 12 feet long.

The cable rack shall be 316 stainless steel and shall be attached to the underneath side of the access cover frame. Cable kellems shall be connected to the cable rack on separate hooks with individual kellems for each pump cable, float level sensor and level transducer.

Pump lifting chain shall be 316 stainless steel of strength sufficient to lift two-times the pump weight and should be attached to the pump lifting handle with a 316 stainless-steel clevis. The length of the lifting chain shall be such that it extends a minimum of 10 feet above deck level.

Level Control System - The Level Control System shall consist of a laser level transducer and an associated Programmable Logic Controller shall actuate the pumps on an alternating "lead-lag" with over-ride basis, with independently adjustable lead pump and lag pump start levels. A Back-Up Redundancy float system shall be comprised of four mechanical tilt float switches (J.E. Rhombus, or as otherwise approved by ERHWSC); one at high level, two alternating lead-lag levels, and one at the stop pumps level.

Discharge Piping - Discharge piping shall be Certa-Lok Yelomine PVC pipe with Schedule 80 glued connection fittings. All discharge pipe penetrations through the fiberglass wet well shall be through the top of the wet well. The penetration through the wet well fiberglass top shall be circular cuts utilizing an appropriately designed hole saw cutter. Only diamond tip hole saws may be used. The coupons must be removed from the wet well along with any debris. SDR-35 PVC pipe sleeve of appropriate diameter will be glassed to the roof of the wet well with the manufacturer's recommended resin and mat material, forming a sleeve for the vertical yelomine discharge piping. The sleeve bottoms shall rest on the fiberglass top and the sleeve tops will be flush with the top slab final grade. The fiberglass cut at the initial hole must be covered with resin to seal the cut fiberglass and should be incorporated with the vertical pvc sleeve that is glassed in place. The position of the holes will be positioned between the fiberglass wet well wall and the wet well hatch opening with spacing appropriate to the factory installed pipe wall bracing brackets (see ERHWSC construction detail sheet). The yelomine discharge piping will be located in the center of the penetration in the wet well roof and so aligned by using two internal wet well schedule 80 solvent weld fittings per discharge pipe. The

discharge pipe will be installed with a Link Seal at the interface with the SDR-35 pipe sleeve. The Discharge piping shall be supported on the inside of the wet well with fiberglass angle wall bracing brackets (see ERHWSC construction detail sheet) and 316SS U-bolts and nuts, contractor to drill the angle from factory installation in the field as necessary.

All wet well surfaces (except for the fiberglass wet well, face of base elbow pump mating surface, power and control cables, and 316 stainless steel guide rails) shall be coated with 15 mils DFT of Polibrid 705X concrete precoat and 80 mils DFT of Polibrid 705 Topcoat (in accordance with manufacturer's recommendations), or alternate coating system approved in advance by ERHWSC.

Discharge Header Assembly – The discharging force mains shall exit through the top of the wet well and turn 90° to the horizontal position with 2.0' of clearance from the bottom of the horizontal piping to the top of the top slab. The discharge piping shall connect to the force main assembly comprised of check valves, plug valves, blind tees and other fittings (see ERHWSC construction detail sheet) located above the top slab with 2.0' of clearance. Each pump shall be equipped with a check valve, tee with blind flange and shut off valve supported with a minimum of two pipe supports (Stand-On Pipe Support System Model S-89 or approved equal). The shut off valves shall be non-lubricated full-port eccentric plug valves with position indicator, cast iron construction and resilient faced plugs, with flanged connection. Check valves shall be Series 500 with backflow actuator. Check and plug valves shall be manufactured by Val-Matic Valve and Manufacturing Corp (or as approved by ERHWSC). The valve assembly shall be installed on a 6-inch thick concrete pad matching the finished grade elevation of the wet well top slab and extend a minimum of 3-feet beyond any of the valve assembly piping. Material beneath the discharge piping concrete pad must be cement stabilized sand, installed in 12-inch lifts, and reaching the depth of the cement stabilized sand installed around the wetwell.

All fittings for the discharge header and valve assembly shall be flanged fittings with 304SS bolts. All ductile iron pipe, fittings, valves, and flanges adapters shall be protected with a two-part epoxy coating of TNEMEC Series 1 Omnithane 6.0 to 8.0 dry mils plus TNEMEC Series N69 Hi-Build Epoxoline II 6.0 to 8.0 dry mils or alternate coating system approved in advance by ERHWSC.

Pumps & Controls – Lift station submersible pumps shall be as manufactured by Flygt or Barnes. Request lift station pump and control design requirements from ERHWSC prior to initiation of any planning efforts. (Refer to Electrical General Requirements and Electrical Control Auxiliaries and Control Panel).

Site Improvements - The lift station shall be protected by a 6-foot high vinyl-coated chain-link fence topped with triple barbed wire, totaling a total 8-feet height, at least 3.0-foot inside the perimeter of the lift station property boundaries. Site property corners shall be marked with 2" diameter, 2-foot high, vinyl-coated fence post for locating purposes. Fence shall be provided with a double-swinging gate (minimum 12-foot wide)

centered on the access roadway. The lift station surface area shall be covered with vegetation proof geotextile membrane, 8 ounce woven, installed on 2-inches of compacted sand and covered with 4 inches of clean crushed limestone (1 ½-inch diameter). The geotextile membrane shall be sloped to drain away from the wet well, valve vault and control panels and extend to the property line of the lift station.

The site shall be provided with a 14-foot wide all-weather driveway from the nearest public access roadway. The roadway shall be comprised of 6-inches of compacted (95-percent std. proctor, +3/-2% moisture) crushed limestone, Tensar Biaxial (BX1100) geogrid (or approved equal), and 16-foot wide compacted subgrade (95-percent std. proctor, +3/-2% moisture). The roadway and manhole covers must not submerge under water after 100-year storm rain events.

Electrical Service drop and meter shall be installed on a 30-foot treated wood pole. The developer shall coordinate service account set-up and service installation with the electric service provider and ERHWSC. The service pole shall include a Heavy-Duty LED Flood Light (Cooper Cata# LD-RC-RW-AD4-E-PER and P200S020 Bracket or approved equal) security light.

A minimum 4-inch diameter vent pipe shall extend underground from the wet well, directly above the inlet piping, to a separate pole from the electrical power service and communications, terminating in a 3/16-inch 316 stainless steel mesh screen on a gooseneck vent at a minimum height of 20 feet above the finish grade of the site mounted on a 30-foot wooden pole in the southwest or northeast corner of the lift station site (whichever is opposite of the electric meter, pole, and electrical rack).

Water supply inside lift station site shall be a minimum 1" service line with reduced-pressure zone type backflow preventer assembly and 3/'4" hose bib. Exposed water supply system components shall be freeze-protected (self-draining, insulated, and/or installed in thermal enclosure) and painted blue.

All lift station designs shall comply with the Owner’s lift station design criteria; Texas Administration Code (TAC) 30 Chapter 217 requirements; and other applicable regulatory codes, such as electrical, sanitary, safety, plumbing, etc.

16. Unless ERHWSC administers the construction contract for the subdivision, the subdivider will be responsible for all sewer taps, manholes, and cleanouts until each lot is sold. At that time the buyer will become responsible. If the Subdivider contracts the work, he/she will provide ERHWSC a one-year warranty on the system. If this warranty is not met in an expedient manner, service will not be provided to any lots until the subdivision owner clears all debts and penalties to ERHWSC for system repairs. Contractors must be approved by ERHWSC before bidding construction work.

17. The developer must execute a Uniform Subdivision Non-standard Service Agreement (USNSA) with ERHWSC, which includes terms of the 30-year service contract in accordance with the Texas Water Development Board Model Subdivision

Rules (if required) and pay all fees before any construction may begin. ERHWSC's approval of the subdivision plat will be contingent upon meeting the terms of the USNSA, and County/City approval of the subdivision.

19. Upon approval of all testing requirements noted above, ERHWSC will provide the subdivider with certification that the subdivision has passed all requirements and the one-year warranty will start.

APPENDIX

31 06 20.16 – Utility Backfill Materials .....31 06 20.16 – 1 through 10
31 32 13.16 – Cement Stabilized Sand .....31 32 13.16 – 1 through 6
16910 - General Requirements for Instrumentation and Control System.....16910 – 1 through 18
16911 – Control Auxiliaries .....16911 – 1 through 12

Section 31 06 20.16 - UTILITY BACKFILL MATERIALS

PART 1 - GENERAL

1.1 SECTION INCLUDES

A. Material Classifications.

B. Utility Backfill Materials:

1. Concrete sand
2. Gem sand
3. Pea gravel
4. Crushed Aggregate: Crushed stone
5. Crushed Aggregate: Crushed concrete
6. Bank run sand
7. Select backfill
8. Random backfill

C. Material Handling and Quality Control Requirements.

1.2 MEASUREMENT AND PAYMENT

A. Unit Prices.

1. No payment will be made for backfill material under this Section. Include payment in unit price for applicable utility installation.

1.3 DEFINITIONS

A. Unsuitable Material: Unsuitable soil materials are the following:

1. Materials that are classified as ML, CL-ML, MH, PT, OH, and OL according to ASTM D 2487.

2. Materials that cannot be compacted to the required density because of either gradation, plasticity, or moisture content.

3. Materials that contain large clods, aggregate, and stones greater than 4 inches in any dimension; debris, vegetation, and waste; or any other deleterious materials.

4. Materials that are contaminated with hydrocarbons or other chemical contaminants.

B. Suitable Material: Suitable soil materials are the following:

1. Those meeting this specification requirements.

2. Unsuitable soils meeting specification requirements for suitable soils after treatment with lime or cement.

C. Foundation Backfill Materials: Natural soil or manufactured aggregate meeting Class I requirements and geotextile filter fabrics as required, to control drainage and material separation. Foundation backfill material is placed and compacted as backfill where needed to provide stable support for the structure foundation base. Foundation backfill materials may include concrete fill and seal slabs.

D. Foundation Base: Crushed stone aggregate with filter fabric as required, cement stabilized sand, or concrete seal slab. The foundation base provides a smooth, level working surface for the construction of the concrete foundation.

E. Backfill Material: Classified soil material meeting specified quality requirements for the designated application as embedment or trench zone backfill.

F. Embedment Material: Soil material placed under controlled conditions within the embedment zone extending vertically upward from top of foundation to an elevation 12 inches above top of pipe, and including pipe bedding, haunching, and initial backfill.

G. Trench Zone Backfill: Classified soil material meeting specified quality requirements and placed under controlled conditions in the trench zone from top of embedment zone to base coarse in paved areas or to the surface grading material in unpaved areas.

H. Foundation: Either suitable soil of the trench bottom, or material placed as backfill of over-excavation for removal and replacement of unsuitable or otherwise unstable soils.

I. Source: A source selected by the Contractor for supply of embedment or trench zone backfill material. A selected source may be the project excavation, off-site borrow pits, commercial borrow pits, or sand and aggregate production or manufacturing plants.

J. Refer to Section 31 23 16.16 - Excavation and Backfill for Utilities for other definitions regarding utility installation by trench construction.

1.4 REFERENCES

A. ASTM C 33 - Specification for Concrete Aggregate.

B. ASTM C 40 - Test Method for Organic Impurities in Fine Aggregates for Concrete.

C. ASTM C 123 - Test Method for Lightweight Pieces in Aggregate.

D. ASTM C 131 - Test Method for Resistance to Degradation of Small-Size Coarse Aggregate by Abrasion and Impact in the Los Angeles Machine.

E. ASTM C 136 - Test Method for Sieve Analysis of Fine and Coarse Aggregates.

F. ASTM C 142 - Test Method for Clay Lumps and Friable Particles in Aggregates.

G. ASTM D 1140 - Test Method for Amount of Materials in Soils Finer Than No. 200 Sieve.

H. ASTM D 2487 - Classification of Soils for Engineering Purposes (Unified Soil Classification System).

I. ASTM D 2488 - Standard Practice for Description and Identification of Soils (Visual-Manual Procedure).

J. ASTM D 4318 - Test Method for Liquid Limit, Plastic Limit, and Plasticity Index of Soils.

K. ASTM D 4643 - Method for Determination of Water (Moisture) Content of Soil by the Microwave Oven Method.

L. TxDOT Tex-101-E - Preparation of Soil and Flexible Base Materials for Testing.

M. TxDOT Tex-104-E - Test Method for Determination of Liquid Limit of Soils (Part 1)

N. TxDOT Tex-106-E - Test Method - Methods of Calculating Plasticity Index of Soils.

O. TxDOT Tex-110-E - Determination of Particle Size Analysis of Soils.

1.5 SUBMITTALS

A. Conform to requirements of Section 01 33 00 - Submittal Procedures.

B. Submit a description of source, material classification and product description, production method, and application of backfill materials.

C. Submit test results for samples of off-site backfill materials to comply with Paragraph 2.3, Materials Testing.

D. Before stockpiling materials, submit a copy of temporary easement or approval from landowner for stockpiling backfill material on private property.

E. For each delivery of material, provide a delivery ticket which includes source location.

1.6 TESTS

A. Perform tests of sources for backfill material in accordance with Paragraph 2.3.

B. Verification tests of backfill materials may be performed by the Owner in accordance with Section 01 45 29 - Testing Laboratory Services and in accordance with Paragraph 3.3.

C. Random fill obtained from the project excavation as source is exempt from pre-qualification requirements by Contractor but must be inspected by the testing lab for unacceptable materials based on ASTM D 2488.

PART 2 - PRODUCTS

2.1 MATERIAL CLASSIFICATIONS

A. Materials for backfill shall be classified for the purpose of quality control in accordance with the Unified Soil Classification Symbols as defined in ASTM D 2487. Material use and application is defined in utility installation specifications and Drawings either by class, as described in Paragraph 2.1B, or by product descriptions, as given in Paragraph 2.2.

B. Class Designations Based on Laboratory Testing:

1. Class I: Well-graded gravels and sands, gravel-sand mixtures, crushed well-graded rock, little or no fines (GW, SW):

   a. Plasticity index: nonplastic.

   b. Gradation: D60/D10 - greater than 4 percent; amount passing No. 200 sieve - less than or equal to 5 percent.

2. Class II: Poorly graded gravels and sands, silty gravels and sands, little to moderate fines:

   a. Plasticity index: nonplastic to 4.

   b. Gradations:

      (1) Gradation (GP, SP): amount passing No. 200 sieve - less than 5 percent.

      (2) Gradation (GM, SM): amount passing No. 200 sieve - between 12 percent and 50 percent.

      (3) Borderline gradations with dual classifications (e.g., SP-SM): amount passing No. 200 sieve - between 5 percent and 12 percent.

3. Class III: Clayey gravels and sands, poorly graded mixtures of gravel, sand, silt, and clay (GC, SC, and dual classifications, e.g., SP-SC):

   a. Plasticity index: greater than 7.

   b. Gradation: amount passing No. 200 sieve - between 12 percent and 50 percent.

4. Class IVA: Lean clays (CL).

   a. Plasticity Indexes:

      (1) Plasticity index: greater than 7, and above A line.

      (2) Borderline plasticity with dual classifications (CL-ML): PI between 4 and 7.

   b. Liquid limit: less than 50.

   c. Gradation: amount passing No. 200 sieve - greater than 50 percent.

   d. Inorganic.

5. Class IVB: Fat clays (CH)

   a. Plasticity index: above A line.

b. Liquid limit: 50 or greater.

c. Gradation: amount passing No. 200 sieve - greater than 50 percent.

d. Inorganic.

6. Use soils with dual class designation according to ASTM D 2487, and which are not defined above, according to the more restrictive class.

2.2 PRODUCT DESCRIPTIONS

A. Soils classified as silt (ML), elastic silt (MH), organic clay and organic silt (OL, OH), and organic matter (PT) are not acceptable as backfill materials. These soils may be used for site grading and restoration in unimproved areas as approved by the Owner. Soils in Class IVB, fat clay (CH) may be used as backfill materials where allowed by the applicable backfill installation specification. Refer to Section 31 23 16.16 - Excavation and Backfill for Utilities.

B. Provide backfill material that is free of stones greater than 4 inches, free of roots, waste, debris, trash, organic material, unstable material, non-soil matter, hydrocarbon or other contamination, conforming to the following limits for deleterious materials:

1. Clay lumps: Less than 0.5 percent for Class I, and less than 2.0 percent for Class II, when tested in accordance with ASTM C 142.

2. Lightweight pieces: Less than 5 percent when tested in accordance with ASTM C 123.

3. Organic impurities: No color darker than standard color when tested in accordance with ASTM C 40.

C. Manufactured materials, such as crushed concrete, may be substituted for natural soil or rock products where indicated in the product specification, and approved by the Engineer, provided that the physical property criteria are determined to be satisfactory by testing.

D. Bank Run Sand: Durable bank run sand classified as SP, SW, or SM by the Unified Soil Classification System (ASTM D 2487) meeting the following requirements:

1. Less than 15 percent passing the number 200 sieve when tested in accordance with ASTM D 1140. The amount of clay lumps or balls not exceeding 2 percent.

2. Material passing the number 40 sieve shall meet the following requirements when tested in accordance with ASTM D 4318:

a. Liquid limit: not exceeding 25 percent.

b. Plasticity index: not exceeding 7.

E. Concrete Sand: Natural sand, manufactured sand, or a combination of natural and manufactured sand conforming to the requirements of ASTM C 33 and graded within the following limits when tested in accordance with ASTM C 136:

Sieve	Percent Passing
3/8"	100
No. 4	95 to 100
No. 8	80 to 100
No. 16	50 to 85
No. 30	25 to 60
No. 50	10 to 30
No. 100	2 to 10

F. Gem Sand: Sand conforming to the requirements of ASTM C 33 for coarse aggregates specified for number 8 size and graded within the following limits when tested in accordance with ASTM C 136:

Sieve	Percent Passing
3/8"	95 to 100
No. 4	60 to 80
No. 8	15 to 40

G. Pea Gravel: Durable particles composed of small, smooth, rounded stones or pebbles and graded within the following limits when tested in accordance with ASTM C 136:

Sieve	Percent Passing
1/2"	100
3/8"	85 to 100
No. 4	10 to 30
No. 8	0 to10
No. 16	0 to 5

H. Crushed Aggregates: Crushed aggregates consist of durable particles obtained from an approved source and meeting the following requirements:

1. Materials of one product delivered for the same construction activity from a single source.

2. Non-plastic fines.

3. Los Angeles abrasion test not exceeding 45 percent when tested in accordance with ASTM C 131.

4. Crushed aggregate shall have a minimum of 90 percent of the particles retained on the No. 4 sieve with 2 or more crushed faces as determined by Test Method Tex-460-A, Part I.

5. Crushed stone: Produced from oversize plant processed stone or gravel, sized by crushing to predominantly angular particles from a naturally occurring single source. Uncrushed gravel is not acceptable material for embedment where crushed stone is shown on the applicable utility embedment drawing details.

6. Crushed Concrete: Crushed concrete is an acceptable substitute for crushed stone as utility backfill. Gradation and quality control test requirements are the same as crushed stone. Provide crushed concrete produced from normal weight concrete of uniform quality; containing particles

of aggregate and cement material, free from other substances such as asphalt, reinforcing steel fragments, soil, waste gypsum (calcium sulfate), or debris.

7. Gradations, as determined in accordance with Tex-110-E.

Sieve	Percent Passing by Weight for Pipe Embedment by Ranges of Nominal Pipes Sizes		
	>15"	15" - 8"	<8"
1"	95 - 100	100	-
3/4"	60 - 90	90 - 100	100
1/2"	25 - 60	-	90 - 100
3/8"	-	20 - 55	40 - 70
No. 4	0 - 5	0 - 10	0 - 15
No. 8	-	0 - 5	0 - 5

I. Select Backfill: Class III clayey gravel or sand or Class IV lean clay with a plasticity index between 7 and 20 or clayey soils treated with lime in accordance with Section 32 01 00 - Pavement Repair and Resurfacing, to meet plasticity criteria. Structural Select Backfill shall need the requirements described in the design plans or as directed by the Engineer.

J. Random Backfill: Any suitable soil or mixture of soils within Classes I, II, III and IV; or fat clay (CH) where allowed by the applicable backfill installation specification. Refer to Section 31 23 16.16 - Excavation and Backfill for Minor Structures and Section 31 23 23.13 - Excavation and Backfill for Utilities.

K. Cement Stabilized Sand: Conform to requirements of Section 31 32 13.16 - Cement Stabilized Sand.

L. Concrete Backfill: Conform to Class B concrete as specified in Section 33 05 16 - Concrete for Utility Construction.

2.3 MATERIAL TESTING

A. Ensure that material selected, produced and delivered to the project meets applicable specifications and is of sufficient uniform properties to allow practical construction and quality control.

B. Source or Supplier Qualification. Perform testing, or obtain representative tests by suppliers, for selection of material sources and products. Provide test results for a minimum of three samples for each source and material type. Test samples of processed materials from current production representing material to be delivered. Tests shall verify that the materials meet specification requirements. Repeat qualification test procedures each time the source characteristic changes or there is a planned change in source location or supplier. Qualification tests shall include, as applicable:

1. Gradation. Complete sieve analyses shall be reported regardless of the specified control sieves. The range of sieves shall be from the largest particle through the No. 200 sieve.

2. Plasticity of material passing the No. 40 sieve.

3. Los Angeles abrasion test of material retained on the No. 4 sieve.

4. Clay lumps.

5. Lightweight pieces

6. Organic impurities

C. Production Testing. Provide reports to the Owner and the Engineer from an independent testing laboratory that backfill materials to be placed in the Work meet applicable specification requirements.

D. Assist the Owner and Testing Lab in obtaining material samples for verification testing at the source or at the production plant.

PART 3 - EXECUTION

3.1 SOURCES

A. Use of material encountered in the trench excavations is acceptable, provided applicable specification requirements are satisfied. If excavation material is not acceptable, provide from other approved source.

B. Identify off-site sources for backfill materials at least 14 days ahead of intended use so that the Owner or Lab may obtain samples for verification testing.

C. Obtain approval for each material source by the Owner before delivery is started. If sources previously approved do not produce uniform and satisfactory products, furnish materials from other approved sources. Materials may be subjected to inspection or additional verification testing after delivery. Materials which do not meet the specifications will be rejected. Do not use material which, after approval, has become unsuitable for use due to segregation, mixing with other materials, or by contamination. Once a material is approved by the Owner, expense for sampling and testing required to change to a different material will be credited to the Owner through a change order.

D. Bank run sand, select backfill, and random backfill, if available in the project excavation, may be obtained by selective excavation and acceptance testing. Obtain additional quantities of these materials and other materials required to complete the work from off-site sources.

E. The Owner or any provided geotechnical reference information does not represent or guarantee that any soil found in the excavation work will be suitable and acceptable as backfill material.

3.2 MATERIAL HANDLING

A. When backfill material is obtained from either a commercial or non-commercial borrow pit, open the pit to expose the vertical faces of the various strata for identification and selection of approved material to be used. Excavate the selected material by vertical cuts extending through the exposed strata to achieve uniformity in the product.

B. Establish temporary stockpile locations for practical material handling and control, and verification testing by the Owner in advance of final placement. Obtain approval from landowner for storage of backfill material on adjacent private property.

C. When stockpiling backfill material near the project site, use appropriate covers to eliminate blowing of materials into adjacent areas and prevent runoff containing sediments from entering the drainage system.

D. Place stockpiles in layers to avoid segregation of processed materials. Load material by making successive vertical cuts through entire depth of stockpile.

3.3 FIELD QUALITY CONTROL

A. Quality Control

1. The Owner or Engineer may sample, and test backfill at:

a. Sources including borrow pits, production plants and Contractor's designated off-site stockpiles.

b. On-site stockpiles.

c. Materials placed in the Work.

2. The Owner or Engineer may resample material at any stage of work or location if changes in characteristics are apparent.

B. Production Verification Testing: The Owner’s testing laboratory will provide verification testing on backfill materials, as directed by the Engineer. Samples may be taken at the source or at the production plant, as applicable.

END OF SECTION

PAGE INTENTIONALLY LEFT BLANK

Section 31 32 13.16 – CEMENT STABILIZED SAND

1.1 GENERAL

A. Section Includes

1. Cement Stabilized Sand necessary for special backfill of utility line work.

1.2 UNIT PRICES

A. Unit Prices

1. Payment for cement stabilized sand necessary for utility line work special backfill conditions is on a cubic yard basis.

2. No payment will be made for cement stabilized sand required for backfill of minor structures as shown in the design plans. Include cost of such work in Contract unit prices for items listed in bid form requiring cement stabilized sand.

1.3 REFERENCES

A. ASTM C 33 - Standard Specification for Concrete Aggregates (Fine Aggregate).

B. ASTM C 40 - Standard Test Method for Organic Impurities in Fine Aggregates for Concrete.

C. ASTM C 42 - Standard Test Methods for Obtaining and Testing Drilled Cores and Sawed Beams of Concrete.

D. ASTM C 94 - Standard Specification for Ready-Mixed Concrete.

E. ASTM C 123 - Standard Test Method for Lightweight Particles in Aggregate.

F. ASTM C 142 - Standard Test Method for Clay Lumps and Friable Particles in Aggregates.

G. ASTM C 150 - Specification for Portland Cement.

H. ASTM D 558 - Standard Test Method for Moisture-Density Relations of Soil Cement – Mixtures.

I. ASTM D 1632 - Standard Practice for Making and Curing Soil-Cement Compression and Flexure Test Specimens in the Laboratory

J. ASTM D 1633 - Standard Test Method for Compressive Strength of Molded Soil-Cement Cylinders.

K. ASTM D 2487 - Standard Test Method for Classification of Soils for Engineering Purposes (Unified Soil Classification System).

L. ASTM D2922 - Standard Test Methods for Density of Soil and Soil-Aggregate in Place by Nuclear Methods (Shallow Depth)

M. ASTM D 3665 - Standard Practice for Random Sampling of Construction Materials.

N. ASTM D 4318 - Standard Test Method for Liquid Limit, Plastic Limit, and Plasticity Index of Soils.

1.4 SUBMITTALS

A. Conform to requirements of Section 01 33 00 - Submittal Procedures.

B. Submit proposed target cement content and production data for sand-cement mixture in accordance with requirements of Paragraph 2.03, Materials Qualifications.

1.5 DESIGN REQUIREMENTS

A. Use sand-cement mixture producing minimum unconfined compressive strength of 100 pounds per square inch (psi) in 48 hours and a maximum strength of 500 pounds per square inch (psi) at 7-days.

1. Design will be based on strength specimens molded in accordance with ASTM D 558 at moisture content within 3 percent of optimum and within 2 hours of batching.

2. Determine minimum cement content from production data and statistical history. Provide no less than 1.5 standard sack (94 lbs.) of cement per ton of dry sand.

PART 2 - PRODUCTS

2.1 MATERIALS

A. Cement: Type I Portland cement conforming to ASTM C 150.

B. Sand: Clean, durable sand meeting grading requirements for fine aggregates of ASTM C 33, or requirements for bank run sand of Section 02320 - Utility Backfill Materials, and the following requirements:

1. Classified as SW, SP, SW-SM, SP-SM, or SM by Unified Soil Classification System of ASTM D 2487.

2. Deleterious materials:

a. Clay lumps, ASTM C 142 - less than 0.5 percent.

b. Lightweight pieces, ASTM C 123; less than 5.0 percent.

c. Organic impurities, ASTM C 40, color no darker than standard color.

3. Plasticity index of 4 or less when tested in accordance with ASTM D 4318.

C. Water: Potable water, free of oils, acids, alkalies, organic matter or other deleterious substances, meeting requirements of ASTM C 94.

2.2 MIXING MATERIALS

A. Add required amount of water and mix thoroughly in pugmill-type mixer.

B. Stamp batch ticket at plant with time of loading. Reject material not placed and compacted within 2 hours after mixing.

2.3 MATERIAL QUALIFICATION

A. Determine target cement content of material as follows:

1. Obtain samples of sand-cement mixtures at production facility representing range of cement content consisting of at least three points.

2. Complete molding of samples within 2 hours after addition of water.

3. Perform strength tests (average of two specimens) at 48 hours and 7 days.

4. Perform cement content tests on each sample.

5. Perform moisture content tests on each sample.

6. Plot average 48-hour strength vs. cement content.

7. Record scale calibration date, sample date, sample time, molding time, cement feed dial settings, and silo pressure (if applicable).

B. Test raw sand for following properties at point of entry into pug-mill:

1. Gradation

2. Plasticity index

3. Organic impurities

4. Clay lumps and friable particles

5. Lightweight pieces

6. Moisture content

7. Classification

C. Present data obtained in format similar to that provided in sample data form attached to this section.

D. The target content may be adjusted when statistical history so indicates. For determination of minimum product performance use formula:

f'c% 1/2 standard deviation

PART 3 - EXECUTION

3.1 PLACING

A. Place sand-cement mixture in maximum 12-inch-thick loose lifts and compact to 95 percent of maximum density as determined in accordance with ASTM D 558, unless otherwise specified. Refer to related specifications for thickness of lifts in other applications. Target moisture content during compaction is +3 percent of optimum. Perform and complete compaction of sand-cement mixture within 4 hours after addition of water to mix at plant.

B. Do not place or compact sand-cement mixture in standing or free water.

C. Where potable water lines cross wastewater line, embed wastewater line with cement stabilized sand in accordance with Texas Administrative Code §290.44(e)(4)(B):

1. Provide minimum of 10% cement per cubic yard of cement stabilized sand mixture, based on loose dry weight volume. Use at least 2.5 standard bags of cement per cubic yard of mixture (2 standard sacks per ton of dry sand).

2. Unless otherwise shown on Drawings, embed wastewater main or lateral minimum of six inches above and below waterline.

3.2 FIELD QUALITY CONTROL

A. Testing will be performed under provisions of Section 01 45 29 - Testing Laboratory Services.

B. One sample of cement stabilized sand shall be obtained for each 150 tons of material placed per day with no less than one sample per day of production. Random samples of delivered cement stabilized sand shall be taken in the field at point of delivery in accordance with ASTM 3665. Obtain three individual samples of approximately 12 to 15 lb. each from the first, middle, and last third of the truck and composite them into one sample for test purpose.

C. Prepare and mold five specimens (for each sample obtained) in accordance with ASTM D 558, Method A, without adjusting moisture content. Samples will be molded at approximately same time material is being used, but no later than 2 hours after water is added to mix.

D. After molding, specimens will be removed from molds and cured in accordance with ASTMD 1632.

E. Specimens will be tested for compressive strength in accordance with ASTM D 1633, Method A. Two specimens will be tested at 48 hours, two specimens will be tested at 7 days and one specimen will be held for an additional 48 hour or 7-day test.

F. A strength test will be average of strengths of two specimens molded from same sample of material and tested at same age. Average daily strength will be average of strengths of all specimens molded during one day's production and tested at same age.

G. Precision and Bias: Test results shall meet recommended guideline for precision in ASTM D 1633 Section 9.

H. Reporting: Test reports shall contain, as a minimum, the following information:

1. Supplier and plant number

2. Material Batch Time

3. Material Sample Time

4. Test age (hours)

5. Average 48-hour strength

6. Average 7-day strength

7. Specification section number

8. Indication of compliance / non-compliance

9. Mixture identification

10. Truck and ticket numbers

11. The time of molding

12. Moisture content at time of molding

13. Required strength

14. Test method designations

15. Compressive strength data as required by ASTM D 1633

16. Supplier mixture identification

17. Specimen diameter and height, in.

18. Specimen cross-sectional area, sq. in.

3.3 ACCEPTANCE

A. Strength level of material will be considered satisfactory if:

1. The average 48-hour strength is greater than 100 psi with no individual strength test below 70 psi.

2. All 7-day individual strength tests (average of two specimens) are greater than or equal to 100 psi and less than 500 psi.

B. Material will be considered deficient when 7-day individual strength test (average of two specimens) is less than 100 psi but greater than 70 psi. See Paragraph 3.04 Adjustment for Deficient Strength.

C. The material will be considered unacceptable and subject to removal and replacement at Contractor's expense when individual strength test (average of two specimens) has 7-day strength less than 70 psi.

D. When moving average of three daily 48-hour averages falls below 100 psi, discontinue shipment to project until plant is capable of producing material, which exceeds 100 psi at 48 hours. Five 48-hour strength tests shall be made in this determination with no individual strength tests less than 100 psi.

E. Testing laboratory shall notify Contractor, Engineer, and material supplier by email of tests indicating results falling below specified strength requirements within 24 hours.

F. If any strength test of laboratory cured specimens falls below the specified strength, Contractor may, at his own expense, request test of cores drilled from the area in question in accordance with ASTM C42. In such cases, three (3) cores shall be taken for each strength test that falls below the values given in 3.03.A.

G. Cement stabilized sand in an area represented by core tests shall be considered satisfactory if the average of three (3) cores is equal to at least 100 psi and if no single core is less than 70 psi. Additional testing of cores extracted from locations represented by erratic core strength results will be

permitted.

3.4 ADJUSTMENT FOR DEFICIENT STRENGHT

A. When mixture produces 7-day compressive strength greater than or equal to 100 psi, then material will be considered satisfactory and bid price will be paid in full.

B. When mixture produces 7-day compressive strength less than 100 psi and greater than or equal to 70 psi, material shall be accepted contingent on credit in payment. Compute credit by the following formula:

$$\text{Credit per Cubic Yard} = \frac{\$100.00 \times 2\,(100\text{ psi} - \text{Actual psi})}{100}$$

C. When mixture produces 7-day compressive strength less than 70 pounds per square inch, then remove and replace cement-sand mixture and paving and other necessary work at no cost to City.

END OF SECTION

SECTION 16910 - GENERAL REQUIREMENTS FOR INSTRUMENTATION and CONTROL SYSTEMS

PART 1 - GENERAL

1.01 SCOPE

A. This section provides general requirements for all instrumentation for process control as shown on drawings and as specified including any other equipment, accessories, and appurtenances as required for a complete and operating system. Complete system shall be furnished by one supplier or manufacturer with at least five (5) years experience in water system controls. TraC-N-Trol is a preapproved supplier or manufacturer. All others must be prequalified by ERHWSC.

1. Similar project experience of the company:

a. Provide a list of at least 3 successfully completed projects for a water and/or wastewater system of similar scope and complexity in which the proposing firm used components the same as those intended for use on this Project. The proposing firm must have performed, for each listed project, system engineering, system fabrication and installation, documentation (including schematic, wiring and panel assembly drawings), software configuration and documentation, field testing, calibration and process start-up, operator instruction, and maintenance training. In addition, provide the following information for each project:

i. Name of plant or system owner, contact name, and current telephone number. Design engineer's name, address, and telephone number. Failure to provide current contact information may result in the listed project being disqualified for use in meeting the minimum requirements for prequalification.

ii. Manufacturer and model number(s) of the PLC based control system and the computer-based SCADA system used for both hardware and software.

iii. Brief description of the system.

iv. Approximate number of input and output signals: analog, digital, and fieldbus.

v. Brief application software description.

vi. Contracted cost of the system separated by base amount and any change orders for the completed projects.

vii. Duration of the project and date of completion.

2. Information on the proposed Project team members:

a. Provide the name and resume of the individual persons who will be responsible for each of the following:

i. Office engineering and management of this Project.

ii. Lead for software configuration/programming.

iii. Individual who will be responsible for the hardware and hardware interface design.

iv. Individual who will be responsible for field testing, calibration, and process start-up.

v. Individual who will be responsible for operator training.

b. All of these individuals must be permanent employees of the proposing firm.

3. Determination of the proposed ICSC qualifications is at the sole discretion of the Engineer.

B. Coordinate instrumentation equipment with all other applicable sections to complete instrumentation and control system, complete with interconnecting wiring diagrams (Point-to-Point) for connecting other equipment. Instrumentation and control shall include metering, sensing, status indication, alarm, interlocking, switching, and miscellaneous components required for control of process variables. Provide necessary wire, conduits, and necessary appurtenances required for complete installation of instrumentation.

C. Contractor shall employ and pay for manufacturer's representative to:

1. Supervise final adjustments, calibration, and commissioning of equipment.
2. Perform necessary modifications to equipment to assure proper operation of equipment as outlined.
3. Conduct equipment start-up.
4. Instruct Owner's personnel for a minimum of one/half (1/2) day at each lift station or other site regarding proper operation and maintenance of instrumentation equipment. One/half (1/2) day of instruction at each lift station site shall be scheduled in writing after start-up & final check out has been completed. One/half (1/2) day shall comprise four (4) hours at each lift station location.
5. Provide Owner with written statement verifying that manufacturer's equipment is installed properly, in service, and ready for operation by the Owner's personnel.

2. SUBMITTALS:

A. Submittal requirements:
1. Furnish submittals that are fully indexed with a tabbed divider for every component.
2. Sequentially number pages within the tabbed sections. Submittals and operation and maintenance manuals that are not fully indexed and tabbed with sequentially numbered pages, or are otherwise unacceptable, will be returned without review.
3. Furnish submittals in the following general order, each in a separate bound set:
a. Schedule of Values.
b. Product Data.
c. After Engineer acceptance of the Product Data, submit the Project Shop Drawing submittals.
d. Loop Description Submittal.
e. The Process Control Hardware and Software Submittal including control system software, programming, and screens.
f. Testing, Calibration and Process Start-Up procedures.
g. Operation and Maintenance Data.

h. Training Submittals.
i. Record Documents.

4. Edit all submittals and operation and maintenance manuals so that the submittal specifically applies to only the equipment furnished.
   a. Neatly cross out all extraneous text, options, models, etc. that do not apply to the equipment being furnished, so that the information remaining is only applicable to the equipment being furnished.
5. Submit copies of shop drawings, and product data:
   a. Show dimensions, construction details, wiring diagrams, controls, manufacturers, catalog numbers, and all other pertinent details.
6. Where submittals are required, provide a separate submittal for each specification section. In order to expedite construction, the Contractor may make more than 1 submittal per specification section, but a single submittal may not cover more than 1 specification section:
   a. The only exception to this requirement is when 1 specification section covers the requirements for a component of equipment specified in another section. (For example, circuit breakers are a component of switchgear. The switchgear submittal must also contain data for the associated circuit breakers, even though they are covered in a different specification section.)
7. Exceptions to Specifications and Drawings:
   a. Include a list of proposed exceptions to the Specifications and Drawings along with a detailed explanation of each.
   b. If there is insufficient explanation for the exception or deviation, the submittal will be returned requiring revision and re-submittal.
   c. Acceptance of any exception is at the sole discretion of the Engineer with Owner's approval.
      1) Provide all items (materials, features, functions, performance, etc.) required by the Contract Documents that are not accepted as exceptions.
   d. Replace all items that do not meet the requirements of the Contract Documents, which were not previously accepted as exceptions, even if the submittals contained information indicating the failure to meet the requirements.

B. Submittal preparation:
1. During the period of preparation of submittals, the Contractor shall authorize direct, informal liaison between the Instrumentation and control system contractor (ICSC) and the Owner or Owner's Engineer for exchange of technical information. As a result of this liaison, certain minor refinements and revisions may be authorized informally by the Owner or Owner's Engineer, which do not alter the scope of Work or cause increase or decrease in the Contract price or times. During this informal exchange, no oral statement by the Owner or Owner's Engineer shall be construed to give formal approval of any component or method, nor shall any statement be construed to grant exception to, or variation from, this specification.
2. In this specification, some items of Work are represented schematically, and are designated for the most part by numbers, as derived from criteria in ISA-5.1:
   a. Employ the nomenclature and numbers designated in this Section and indicated on the Drawings exclusively throughout shop drawings, data sheets, and similar submittals.

b. Replace any other symbols, designations, and nomenclature unique to a manufacturer's, suppliers, or subcontractor's standard methods with those identified in this Section and indicated on the Drawings.

C. Specific submittal requirements:
1. Shop drawings:
a. Required for materials and equipment listed in this and other sections.
b. Furnish sufficient information to evaluate the suitability of the proposed material or equipment for the intended use, and for compliance with these Specifications.
c. Shop drawings requirements:
1) Front, side, and, rear elevations, and top and bottom views, showing all dimensions.
2) Locations of conduit entrances and access plates.
3) Component layout and identification.
4) Schematic and wiring diagrams with wire numbers and terminal identification.
5) Connection diagrams, terminal diagrams, internal wiring diagrams, conductor size, etc.
6) Anchoring method and leveling criteria, including manufacturer's recommendations for the Project site seismic criteria.
7) Weight.
8) Finish.
9) Nameplates:
a) As specified in Section 16075 - Identification for Electrical Systems or as indicated on the Drawings.
10) Temperature limitations, as applicable.
d. Use equipment and instrument tags as depicted on the P&IDs for all submittals.
e. Adhere to wiring numbering scheme outlined in Section [Identification for Electrical Systems] throughout the Project:
1) Uniquely number each wire per the Specifications.
f. Wire numbers must appear on all equipment drawings.
g. Organize the shop drawing submittals for inclusion in the Operation and Maintenance Manuals:
1) Furnish the initial shop drawing submittal bound in one or more standard size, 3-ring, D-ring, loose-leaf, vinyl plastic, hard-cover binders suitable for bookshelf storage.
2) Binder ring size: 2 inches.
h. Include the letterhead and/or title block of the firm responsible for the preparation of all shop drawings. Include the following information in the title block, as a minimum:
1) The firm's registered business name.
2) Firm's physical address, email address, and phone number.
3) Owner's name.
4) Project name and location.
5) Drawing name.
6) Revision level.
7) Personnel responsible for the content of the drawing.
8) Date.

i. The work includes modifications to existing circuits:
   1) Clearly show all modifications to existing circuits.
   2) In addition, show all existing unmodified wiring to clearly depict the functionality and electrical characteristics of the complete modified circuits.

2. Product data:
   a. Submitted for non-custom manufactured material listed in this and other sections and shown on shop drawings.
   b. Include:
      1) Catalog cuts.
      2) Bulletins.
      3) Brochures.
      4) Quality photocopies of applicable pages from these documents.
      5) Identify on the data sheets the Project name, applicable specification section, and paragraph.
      6) Identify model number and options for the actual equipment being furnished.
      7) Neatly cross out options that do not apply or equipment not intended to be supplied.
   c. Use equipment and instrument tags as depicted on the P&IDs for all submittals.
   d. Adhere to wiring numbering scheme outlined in Section 16075 - Identification for Electrical Systems throughout the Project:
      1) Uniquely number each wire per the Specifications.
   e. Wire numbers must appear on all equipment drawings.
3. Detailed sequence of operation for all equipment or systems.
4. Operation and maintenance manuals:
   a. Submit preliminary sets of these manuals to the Engineer for review of format and content:
      1) Engineer will return 1 set with comments.
      2) Revise and/or amend as required and submit the requisite number of copies to the Engineer 15 days before Functional Testing of the systems.
   b. Incorporate changes that occur during process start-up and submit as part of the final manuals.
   c. Provide comprehensive information on all systems and components to enable operation, service, maintenance, and repair.
   d. Include Record Documents and the accepted shop drawing submittals, modified for conditions encountered in the field during the work.
   e. Include signed results from Functional Testing and Process Operational Period.
   f. Provide installation, connection, operating, calibration, setpoints (e.g., pressure, pump control, time delays, etc.), adjustment, test, troubleshooting, maintenance, and overhaul instructions in complete detail.
   g. Provide exploded or other detailed views of all instruments, assemblies, and accessory components together with complete parts lists and ordering instructions.
   h. Spare parts list:
      1) Include a priced list of recommended spare parts for all the equipment furnished under this Contract:
         a) Include recommended quantities sufficient to maintain the furnished system for a period of 5 years.

2) Annotate the list to indicate which items, if any and quantity are furnished as part of this Contract.

i. Provide the name, address, and phone number of manufacturer and manufacturer's local service representative of these parts.

j. Additional operation and maintenance manual requirements:
1) Completely index manuals with a tab for each section:
a) Each section containing applicable data for each piece of equipment, system, or topic covered.
b) Assemble manuals using the accepted shop drawings, and include, the following types of data:
(1) Complete set of 11-inch by 17-inch drawings of equipment.
(2) Complete set of 11-inch by 17-inch drawings of the control system.
(3) Complete set of control schematics.
(4) Complete parts list for all equipment being provided.
(5) Catalog data for all products or equipment furnished.

k. Operational Manual:
1) Prepare and provide a simplified version of the standard manufacturer's HMI software and system operations manual that includes basic instructions in the application of the system as required for operators in day-to-day operations.

l. Control System Software Record Documents:
1) Include complete documentation of all the software programs provided for the entire control and PCS system, including:
a) Listings of all application software on both hard copy and DVD, DVD-ROM, and CD-ROM.
b) Database, both hard copy and DVD, DVD-ROM, and CD-ROM.
c) Communication protocols.
d) All documentation necessary to maintain, troubleshoot, modify, or update the software system.

m. Organize the operation and maintenance manuals for each process in the following manner:
1) Section A - Process and Instrumentation Diagrams.
2) Section B - Control Descriptions.
3) Section C - Loop Drawings.
4) Section D – Ladder Logic Drawings
5) Section E - Instrument Summary.
6) Section F - Instrument Data Sheets and Brochures.
7) Section G - Sizing Calculations.
8) Section H - Instrumentation Installation Details.
9) Section I - Test Results.
10) Section J - Operational Manual.
11) Section K - Spare Parts List.
12) Section L - Control System Software.

5. Material and equipment schedules:
a. Furnish a complete schedule and/or matrix of all materials, equipment, apparatus, and luminaries that are proposed for use:

1) Include sizes, names of manufacturers, catalog numbers, and such other information required to identify the items.

6. Itemized instrument summary:
   a. Submit a hard copy of the instrument summary.
   b. List all of the key attributes of each instrument including:
      1) Tag number.
      2) Manufacturer.
      3) Model number.
      4) Service.
      5) Area location.
      6) Calibrated range.
      7) Loop drawing number.
   c. Associated LCP, VCP, PCM, or PLC.
7. Instrument data sheets and cut sheets:
   a. Furnish fully completed data sheets, both electronically in Microsoft Word or Excel and in hard copy, for each instrument and component according to ISA-20 Specification Forms for Process Measurement and Control Instruments, Primary Elements and Control Valves. The data sheets provided with the instrument specifications are preliminary and are not complete. They are provided to assist with the completion of final instrument data sheets. Additional data sheets may be required. Include the following information on the data sheet:
      1) Component functional description specified in this Section and indicated on the Drawings.
      2) Manufacturers model number or other product designation.
      3) Tag number specified in this Section and indicated on the Drawings.
      4) System or loop of which the component is a part.
      5) Location or assembly at which the component is to be installed.
      6) Input and output characteristics, including digital bus communication.
      7) Scale range with units and multiplier.
      8) Requirements for electric supply.
      9) Requirements for air supply.
      10) Power consumption.
      11) Response timing.
      12) Materials of construction and of component parts that are in contact with, or otherwise exposed to, process media, and or corrosive ambient air.
      13) Special requirements or features, such as specifications for ambient operating conditions.
      14) Features and options that are furnished.
   b. Provide a technical brochure or bulletin (“cut sheet”) for each instrument on the project. Submit with the corresponding data sheets:
      1) Where the same make and model of instrument is used in 2 or more applications on the project, and the process applications are nearly identical, and the materials, features and options are identical submit one brochure or bulletin for the set of identical instruments.
      2) Include a list of tag numbers for which it applies with each brochure or bulletin.

3) Furnish technical product brochures that are complete enough to verify conformance with all Contract Document requirements, and to reflect only those features supplied with the device.
4) Cross out models, features, options, or accessories that are not being provided.
5) Clearly mark and identify special options and features.

c. Organization: Index the data sheets and brochures in the submittal by systems or loops.

8. Control panel hardware submittal:
   a. Submit the following in 1 submittal package.
   b. Complete and detailed bills of materials:
      1) Including quantity, description, manufacturer, and part number for each assembly or component for each control panel.
      2) Include all items within an enclosure.
   c. Complete grounding requirements for each system component including any requirements for PLCs, process LANs, and Control System equipment.
   d. Requirements for physical separation between control system components and 120 VAC, 480 VAC, and medium voltage power cables.
   e. UPS and battery load calculations to show that the backup capacity and time meet the specified requirements.
   f. Provide a data sheet for each control system component together with a technical product brochure or bulletin, which include:
      1) The manufacturer's model number or other identifying product designation.
      2) Tag and loop number.
      3) System to which it belongs.
      4) Site to which it applies.
      5) Input and output characteristics.
      6) Requirements for electric power.
      7) Device ambient operating requirements.
      8) Materials of construction.
9. Schedule of values:
   a. In addition to completing all items referred to in the schedule of values, Section 01292 - Schedule of Values, submit per unit instrument and labor costs used in developing the final bid for the PCS system, for the express purpose of pricing and cost justification for any proposed change orders. It is the responsibility of the ICSC subcontractor to prove to the Engineer’s satisfaction that said per unit costs were used in the development of the final Bid amount.
10. Installation recommendations:
    a. Submit the manufacturer’s printed recommendations for installation of instrumentation equipment.
11. Training submittals:
    a. Develop and submit for review a general training plan for approval by Owner within 14 calendar days from Notice to Proceed. Include complete descriptions of all planned training classes, a preliminary training schedule, a list of all proposed instructors along with resumes, examples of proposed training manuals, and a description of any special training tools to be used (simulators, self-paced modules, personal computer-based training, etc.).

b. The Engineer will review the general training plan. Special emphasis will be placed on review of the qualifications of the proposed instructors and the timing of the individual courses to maximize their effectiveness. If, in the opinion of the Engineer, the proposed instructors are not sufficiently qualified to conduct the specified training courses, or lack experience, where required, on the specific configuration of the system, provide more qualified instructors.
c. The general training plan and schedule shall be updated by the Contractor at the beginning of each Phase and approved by the Owner a minimum of 30 days prior to commencement of training.
d. Training course plan submittals:
    1) For each training course or other training activity, submit a detailed, complete outline and agenda for each lesson as specified in Section 01756 - Commissioning.
    2) Describe any student pre-requisites for the course or training activity.
    3) Provide an updated schedule for all sessions of the course, including dates, times, durations, and locations.
    4) Submit training materials.
e. Incorporate all submittal review comments into the course.
f. Do not conduct training courses before review and acceptance of the Course Plan submittal for the course.

12. Project Record documents:
    a. Furnish as specified in Section 01770 - Closeout Procedures.
    b. Shop drawings:
        1) General:
            a) Coordinate all aspects of the Work so that a complete, instrumentation, computer, and control system for the facility is supported by accurate shop and record drawings:
                (1) Clearly show every wire, circuit, and terminal provided under this contract on one or more submitted wiring diagrams.
            b) Show all interfaces between any of the following: instruments, vendor control panels, motor control centers, motor starters, variable speed drives, control valves, flow meters, chemical feeders, digital bus network equipment, and other equipment related to the PCS.
            c) Generate all drawings developed for this project utilizing AutoCAD by Auto Desk Version 2012 or later:
                (1) Furnish on CD-ROM disks containing the following for each drawing:
                    (a) Original CAD files in DWG format.
                    (b) PDF version.
                (2) Provide hard copies on 11-inch by 17-inch plain bond paper.
            d) Upon completion of the Work, update all shop drawings to indicate the final as-built configuration of the systems:
                (1) Should an error be found in a shop drawing during installation or process start-up of equipment, note the correction, including any field changes found necessary, on the drawing and submit the corrections in the Record Documents.

(2) Update, check, and revise all wiring drawings and other submitted drawings and documents to show final installed conditions.
(3) Provide as-built shop drawings for all instrumentation equipment on 11-inch by 17-inch using plain bond paper.
(4) Provide electronic copies of these documents on CD-ROM disks in AutoCAD DWG 2010 format or later and PDF format. Size all drawings to be readable and legible on 11-inch by 17-inch media.

e) Submittal Documents:
(1) Provide an interim submittal of Record Documents after the PCS system Functional Testing.
(2) Submit final Record Documents before Substantial Completion or earlier if so, specified in Section 01782 - Operation and Maintenance Data or the General Requirements.

f) Review and Corrections:
(1) Correct any Record Documents or other documents found to be incomplete, not accurate, of poor quality, or containing errors.
(2) Promptly correct and re-submit Record Documents returned for correction.

2) Furnish written information prepared specifically for this Project using Microsoft Word and.PDF formats and printed on 8.5-inch by 11-inch plain bond paper:
a) Provide electronic copies of these documents on CD-ROM disks.

c. Review and corrections:
1) Correct any record documents or other documents found to be incomplete, not accurate, of poor quality, or containing errors.
2) Promptly correct and re-submit record documents returned for correction.

13. Loop Drawings:
a. Submit loop drawings for every analog, discrete, and fieldbus signal and control circuit:
1) Provide a loop drawing submittal that completely defines and documents the contents of each monitoring, alarming, interlock, and control loop on this Project.
2) This requirement applies to all signal and control circuits associated with equipment on this Project including vendor supplied equipment packages and control panels.
3) Provide loop drawings in the format indicated in the contract drawings. Provide all tagging in accordance with the Owner’s standard.
b. Show every instrument and I/O point on at least one loop diagram.
c. Provide a complete index in the front of each bound volume:
1) Index the loop drawings by systems or process areas.
d. Provide drawings showing definitive diagrams for every instrumentation loop system:
1) Show and identify each component of each loop or system using requirements and symbols from ISA-5.4.
2) Furnish a separate drawing sheet for each system or loop diagram.
e. In addition to the ISA-5.4 requirements, show the following details:
1) Functional name of each loop.

2) Reference name, drawing, and loop diagram numbers for any signal continuing off the loop diagram sheet.
3) Show all terminal numbers, regardless of the entity providing the equipment.
4) MCC panel, circuit, and breaker numbers for all power feeds to the loops and instrumentation.
5) Designation of and, if appropriate, terminal assignments associated with, every manhole, pull-box, junction box, conduit, and panel through which the loop circuits pass.
6) Show vendor control panel, instrument panel, conduit, junction box, equipment and PCS terminations, termination identification, wire numbers and colors, power circuits, and ground identifications.
7) If a circuit is continued on another drawing, show the name and number of the continuation drawing on the loop drawing. Provide complete references to all continuation drawings whether vendor control panels, other loop drawings, existing drawings provided by the Owner, or other drawings.

f. In addition to the above requirements, provide loop diagrams in accordance with the example loop diagram as indicated on the Drawings.

14. Instrument Installation Drawings:
a. Submit, instrument installation, mounting, and anchoring details for all components and assemblies, including access requirements and conduit connection or entry details.
b. Furnish for each instrument a dedicated 8 1/2-inch by 11-inch installation detail that pertains to the specific instrument by tag number.
c. For each detail, provide certification and the hard copies, by the instrument manufacturer, that the proposed installation is in accordance with the instrument manufacturer's recommendations and is fully warrantable.
d. For each detail, provide, as a minimum, the following contents:
1) Necessary sections and elevation views required to define instrument location by referencing tank, building or equipment names and numbers, and geographical qualities such as north, south, east, west, basement, first floor, etc.
2) Ambient temperature and humidity where the instrument are to be installed.
3) Corrosive qualities of the environment where the instrument is to be installed.
4) Hazardous rating of the environment where the instrument is to be installed.
5) Process line pipe or tank size, service and material.
6) Process tap elevation and location.
7) Upstream and downstream straight pipe lengths between instrument installation and pipe fittings and valves.
8) Routing of tubing and identification of supports.
9) Mounting brackets, stands, anchoring devices, and sunshades.
10) Conduit entry size, number, location, and delineation between power and signal.
11) NEMA ratings of enclosures and all components.
12) Clearances required for instrument servicing.

13) List itemizing all manufacturer makes, model numbers, quantities, lengths required, and materials of each item required to support the implementation of the detail.

15. Control Panel Drawings:
    a. Layout Drawings:
        1) Submit panel, enclosure, console, furniture, and cabinet layout drawings for all items provided.
        2) As a minimum, include the following information:
            a) To scale front, side, and plan views.
            b) Dimensions.
            c) Interior and exterior arrangements.
            d) Mounting information, including conduit entrance location.
            e) Finish data.
            f) Tag number and functional name of items mounted in and on each panel, console, and cabinet.
            g) Nameplate legend including text, letter size, materials, and colors.
    b. Wiring and piping diagrams:
        1) Submit panel wiring and piping diagrams for every panel that contains wiring and/or piping.
        2) Include the following information:
            a) Name of panel.
            b) Wiring and piping sizes and types.
            c) Terminal strip numbers.
            d) Wire tags and labels.
            e) Functional name and manufacturer's designation for items to which wiring, and piping are connected.
            f) Electrical control schematics in accordance with ANSI standards.
    c. Installation drawings:
        1) Provide site-specific installation drawings for all control equipment panels, including dimensions.
        2) Provide scaled drawings and show the position of the equipment at its intended installation location.
        3) Show the placement of all equipment being provided under this Contract and its spatial relationship to all other equipment located in the abutting and adjoining areas.
        4) Show all required access and clearances associated with the equipment with a statement of compliance to manufacturer's recommendations, NEC, and other applicable codes.
16. Schematic Diagrams:
    a. Submit schematic diagrams for all electrical equipment in ladder diagram format.
    b. Include device and field connection terminal numbers on all schematic diagrams.
    c. Incorporate equipment manufacturer’s shop drawing information into the schematic diagrams in order to document the entire control system.
17. Control System Diagram:
    a. Submit a complete set of control system diagrams including the following information:
        1) All PLCs, workstations, printers, communication devices, and communication links:

a) Show all PLCs with their current I/O allocation, and future I/O allocation, current plus spares provided, and maximum potential I/O based on available slots.

2) All cables required for communication requirements.

3) Show each component fully annotated with conduit size and number associated with the power source.

18. Process Control Software Submittal:
    a. In accordance with Product Data and Shop Drawing general requirements.
    b. Submit a complete description of the standard application software programs, operating system and utility programs, including modifications and explanation of how the specific functional requirements are met:
        1) Provide a cross-reference between the Specification requirements and the software submittal, in order to provide the Engineer, the ability to identify how each specified requirement or function is met.
    c. A complete listing of the PCS system point I/O database:
        1) Include for each data point, relevant parameters such as range, contact orientation, limits, incremental limits, I/O card byte, I/O hardware address, and PLC assignment.
        2) Organize on a site-by-site basis, separate by point type.
        3) In addition to the active l/O points, list the implemented spare l/O points and the available l/O points remaining on each card, as well as other defined future points specified or shown.
        4) Upon completion of the Work, update all I/O lists to indicate the final as-built configuration of the systems:
            a) Organize as-built I/O list on a site-by-site basis, separated by equipment and point type.
    d. Detailed descriptions of procedures used to implement and modify control strategies and database construction.
    e. Preliminary overview, screens, station graphic displays, and preliminary reports.
    f. Refer to Section 17762 - Control Systems: PCS Software for additional requirements.
19. Instrumentation and Control System Contractor Statement of Qualifications:
    a. Submit statement of qualifications of the proposed ICSC in accordance with subsequent requirements of this Section.
20. Control Descriptions:
    a. For each control loop, provide a detailed functional description of the operation of the equipment, signals, and controls as shown on the P&IDs:
        1) Include all functions depicted or described in the Contract Documents.
        2) Include within the Control Description content:
            a) All specific requirements.
            b) All common requirements that pertain in general to all loops.
            c) Listing all ranges, setpoints, timers, values, counter values, etc.
21. Test Procedure Submittals:
    a. Submit the proposed procedures to be followed during tests of the PCS and its components in 2 parts:
        1) Preliminary Submittal: Outline of the specific proposed tests and examples of proposed forms and checklists.

2) Detailed Submittal: After successful review of the Preliminary Submittal, submit the proposed detailed test procedures, forms, and checklists. Include a statement of test objectives with the test procedures.

22. Test reports:
    a. As specified in Section 01 33 00 - Submittal Procedures.
    b. Include the following:
        1) A description of the test.
        2) List of equipment used.
        3) Name of the person conducting the test.
        4) Date and time the test was conducted.
        5) All raw data collected.
        6) Calculated results.
        7) Each report signed by the person responsible for the test
23. Calculations:
    a. Where required by specific Instrumentation Specifications:
        1) Because these calculations are being provided by a registered professional engineer, they will be reviewed for form, format, and content but will not be reviewed for accuracy and calculation means.

3. QUALITY STANDARDS:

A. General: The Contractor shall furnish and coordinate instrumentation items through a single supplier/subcontractor. Instrumentation items shall comply with recommended practices of ISA for performance and U/L standards for specific atmospheric application. Provide enclosures which comply with NEMA standards for each specific application.

1. Furnish all equipment listed by and bearing the label of UL or of an independent testing laboratory acceptable to the Engineer and the Authority Having Jurisdiction.

2. The Instrumentation and control system contractor (ICSC) must have their own operating UL listed panel fabrication facility. All panels must be fabricated at this facility and meet all UL 508/508A requirements.

3. Instrumentation and control system contractor:
    A. Contractor, through the use of a qualified ICSC, is responsible for the implementation of the PCIS and the integration of the system with other required instrumentation, control devices, and software.
    B. The ICSC assumes full responsibility, through the Contractor, to perform all work to select, furnish, install, program, test, calibrate, and place into operation all instrumentation, controls, telemetry equipment, control panels, and control system including application software, for a complete, integrated and functional PCIS system.
    C. Due to the complexities associated with the interfacing of numerous control system devices, it is the intent of these Specifications that the ICSC be responsible for the integration of the PCIS with devices provided under the

Contract Documents with the objective of providing a completely integrated control system.

B. Components:

A. Analog signals:
   a. Furnish analog measurements and control signals that vary in direct linear proportion to the measured variable, unless otherwise indicated.
   b. Furnish electrical analog signals outside control panels that are 4-to-20 milliamperes 24 VDC, except as indicated.
   c. Electrically or optically isolate all analog signals from other signals.
   d. Furnish regulated analog signals that are not affected by changes in supply voltage or load resistance within the unit's rating.
   e. Maintain the total 4-to-20 milliamperes loop impedance to 10 percent below the published value at the loop operating voltage.
   f. Where necessary, reduce loop impedance by providing current-to-current (I/I) isolation amplifiers for signal re-transmission.

B. Pneumatic signals:
   a. All pneumatic signals: 3-to-15 pounds per square inch gauge.

C. Discrete input signals:
   a. As indicated in the controller hardware specification.

D. Discrete output signals:
   a. Dry contacts or TRIAC outputs (with express written approval by the Engineer) as needed to coordinate with the field device.
   b. Provide external terminal block mounted fuse with blown fuse indication for all discrete outputs.
   c. Provide interposing relays for all discrete outputs for voltage and/or current compatibilities.
   d. Provide interposing relays as required for functionality of the control circuit.

E. Signal performance and design criteria:
   a. Stability:
      i. After Controls have taken corrective action, oscillation of the final control element shall not exceed 2 cycles per minute or a magnitude of motion of 0.5 percent of full travel.
   b. Response:
      i. Any change in setpoint or controlled variable shall produce a corrective change in position of the final control element and stabilized within 30 seconds.
   c. Agreement:
      i. Setpoint indication of controlled variable and measured indication of controlled variable shall agree within 3 percent of full scale over a 6:1 operating range.
   d. Repeatability:
      i. For any repeated magnitude of control signal, from either an increasing or decreasing direction, the final control element shall take a repeated position within 0.5 percent of full travel regardless of force required to position the final element.

e. Sensitivity:
    i. Controls shall respond to a setpoint deviations and measured variable deviations within 1.0 percent of full scale.
f. Performance:
    i. All instruments and control devices shall perform in accordance with the manufacturers' specifications.

2. Discrete circuit configuration:
    A. Configure discrete control circuits to fail safe, on loss of continuity or loss of power.
    B. Alarm contacts: Fail to the alarm condition.
    C. Control contacts fail to the inoperative condition unless otherwise indicated on the Drawings.

3. Grounding:
    A. Analog signal cables shields shall only be grounded at a single point in the loop. Unless otherwise noted, ground signal cable shields at control panel.
    B. For communication and data line signal cable shields and drain wires should be grounded at both ends of the cable.
    C. Insulate the shielding and exposed drain wire for each signal cable with heat-shrink tubing.
    D. Terminate the signal cable shield on a dedicated grounding terminal block.
    E. Provide isolating amplifiers within control panels for field equipment possessing a grounded input or output, except when the panel circuit is galvanically isolated.

4. Instrument air:
    A. Where indicated on the Drawings, provide dry, filtered control air at 30 pounds per square inch gauge nominal pressure piped to all field instruments and instrument panels requiring air:
        a. Provide each field instrument with an integral, non-adjustable filter/regulator assembly to provide regulated air.
        b. Provide each instrument panel requiring air with an adjustable filter/regulator assembly with gauge and an air manifold to provide air to pneumatic instruments.
        c. Filter all air to 5-micron maximum particle size.
        d. Provide low pressure switch to alarm on insufficient air supply.

5. Furnish all meters, instruments, and other components that are the most recent field proven models marketed by their manufacturers at the time of submittal of the shop drawings unless otherwise specified to match existing equipment.

6. Unless otherwise specified, furnish individual instruments that have a minimum accuracy of within 0.5 percent of full scale and a minimum repeatability of within 0.25 percent of full scale.

C. Requirements for electrical systems:

(1) Provide power to instrument power supplies from branch circuit panel boards.

(2) Ensure operation of instruments from station supply of 115 volts, 60 Hz, single phase service with voltage variations limited to plus or minus 10 percent of 115 volts.

(3) Control signals shall be 4 to 20 milliampere, 24-volt direct current. Furnish instruments of solid-state construction with ungrounded negative.

(4) Furnish and install a Surge Protective Device (SPD) on all analog signal circuits at the point where they receive their power.

D. Reference Standards:

(1) ISA - Instrument Society of America

(2) NEMA - National Electrical Manufacturers Association

(3) NBS - National Bureau of Standards

(4) U/L - Underwriter's Laboratories

4. FIELD INSTRUMENTS INSTALLATION:

1. Install field instruments as specified in the Contract Documents, API RP 550 and RP 551, and the manufacturer’s instructions.
2. Mount field instruments so that they can be easily read, readily approached, and easily serviced, and so they do not restrict access to mechanical equipment:
   a. Mount field instruments on a pipe stand or local panel, if they are not directly mounted, unless otherwise indicated on the Drawings.
   b. Provide sun shields for all field electronic instruments located outdoors.
3. Make connections from rigid conduit systems to field instruments with PVC coated flexible conduit, maximum length of 18-inches.
4. Connect field instruments with cable as specified in the Electrical Specifications, except when the manufacturer requires the use of special cable, or otherwise specified in this Section:
   a. Special cable applications shall be in accordance with the NEC.
5. Verify the correctness of each installation:
   a. Polarity of electric power and signal connections.
6. Ensure all process connections are free of leaks.
7. Equipment locations indicated on the Drawings may change due to variations in equipment size or minor changes made by others during construction:
   a. Verify all dimensions as indicated on the Drawings:
   b. Actual field conditions govern all final installed locations, distances, and levels.

8. Review all information indicated on the Drawings, including architectural, structural, mechanical, instrumentation, and the accepted electrical, instrumentation, and mechanical shop drawings, and coordinate Work as necessary to adjust to all conditions that arise due to such changes.
9. Make minor changes in location of equipment before rough in, as directed by the Owner or Engineer.

B. Commissioning: The Contractor shall employ, contract, and pay for services of instrumentation subcontractor to in- stall, calibrate and commission instrumentation and control loops including final control elements. Other sections of the specifications involved shall include, but are not limited to, the following.

Section 16911 - Control Auxiliaries

END OF SECTION

SECTION 16911 – CONTROL AUXILIARIES

PART 1 – GENERAL

1.01 SCOPE

A. The items to be furnished and installed under this section of the Specification consist of all control auxiliaries as shown on the drawings and as specified, including any equipment, accessories, and appurtenances necessary for a complete and operable system.

B. Items required in the project include but are not necessarily limited to the following:

Hand Switches
Converters
Control Panels
Control Relays
PLC
Instrumentation

1.02 HAND SWITCHES

A. Furnish and install hand-switches to locations shown on the plans (Open, Close, Start, Stop, Selector Switch, HOA, LOR, etc.)

B. Provide each switch with sufficient number of contacts and pushbuttons to perform functions specified or as indicated on the contract drawings. Provide switches with engraved legends and stainless steel nameplates. Provide NEMA 4X rated switches of heavy-duty oil tight construction in NEMA-4X rated enclosures unless specifically noted otherwise on the contract drawings.

1.03 CONVERTERS

A. Furnish and install converters to locations shown on the plans and suitable for application specified. Coordinate converters with applicable elements in control loops. Converters include current-to-current converters for conversion of pulse frequent signals to 4-20 mAdc signals.

B. Provide current-to-current converters capable of converting a 4-20 mAdc signal to a 4-20 mAdc signal switch which is in phase and of the same magnitude as the received signal. Furnish a unit of all solid-state design and which will provide electrical isolation by means of a magnitude amplifier. Coordinate units fully with equipment specified for the control functions.

C. Furnish unit as manufactured by AGM Electronics, Inc., Moore Products, Moore

Industries.

1.04 CONTROL PANELS

A. Panels/enclosures:
   1. Manufacturers: One of the following:
      a. Rittal.
      b. nVent/Hoffman.
   2. Panel assembly:
      a. General guidelines for panel fabrication include:
         1) Continuous welds ground smooth.
         2) Exposed surfaces free of burrs and sharp edges.
         3) Base formed of Type 304 powder-coated stainless steel or Type 316 stainless steel, minimum 1/2-inch holes at 12-inch spacing to accommodate anchoring of freestanding enclosures to floor.
      b. Construct enclosure and mounting panel using stretcher-level quality Type 304 powder-coated stainless steel or Type 316 stainless steel sheet metal having minimum thickness not less than the following sizes (U.S. Standard Gauge):

Enclosure Height (inches)	**Minimum Enclosure Steel Thickness (gauge)**	**Minimum Back Mounting Panel Thickness (gauge)**
Wall-mounted up to 48	14	14
Up to 57	12	12
57 - 69	12	10
69 - 82	12, except 10 on back	10
82 or more	10	10

      c. Construct supporting frame structure with angled, channeled, or folded rigid section of sheet metal, rigidly attached to and having essentially the same outer dimensions as the enclosure surface and having sufficient torsional rigidity to resist the bending moments applied via the enclosure surface when it is deflected.
      d. Provide stiffeners for back mounting panels in enclosures larger than 4-feet. In addition, secure the panels in place by collar studs welded to the enclosure.
      e. Door construction:
         1) Turned-back edges suitably braced and supported to maintain alignment and rigidity without sagging.
         2) Sufficient width to permit door opening without interference with rear projection of flush-mounted instruments.
         3) Heavy-gauge Type 316 stainless steel hinges.
         4) For NEMA Type 12, Type 4, and Type 4X, provide oil-resistant neoprene sealing gasket and adhesive to seal cover to enclosure.
         5) Gasket installed to seal against roll lip on the enclosure opening.
      f. Latches:
         1) For panels, provide each door with a 3-point latching mechanism and locking handle with rollers on the ends of the latch rods. Latch rods shall be

connected to a common door handle, hold doors securely, and form a compressed seal between door and gasket, at the top, side, and bottom.
a) Provide padlock for each enclosure with padlock provisions.
2) Include an oil tight key-locking, 3-point latching mechanism on each door:
a) Provide 2 keys per panel.
b) All locks keyed alike.
g. Panel cut-outs:
1) Cut, punch, or drill cutouts for instruments, devices, and windows. Smoothly finish with rounded edges.
2) Allow a minimum of 3-inch envelope around all displays, controllers, and monitors.
3) Reinforce around cut-outs with Type 304 powder-coated stainless steel or Type 316 stainless angles or flat bars for the following:
a) Large panel cutouts; for example, openings for local operator interfaces.
b) Pilot device groupings, where the removed metal exceeds 50 percent of the available metal.

3. In addition to the requirements specified above, the following requirements for NEMA Type 4X powder coated Type 304 stainless steel enclosures apply:
a. Minimum 14-gauge, Type 304 stainless steel.
b. Captive Type 316 stainless-steel cover screws threaded into sealed wells.
c. Inside finish: White polyester powder coating.
d. Specifically designed for use with flange-mounted disconnect handles where required or as indicated on the Drawings.
e. NEMA Type 4X powder-coated Type 304 stainless-steel enclosures are not an acceptable substitute for 316 stainless steel unless indicated on the Drawings.
4. In addition to the requirements specified above, the following requirements apply for NEMA Type 4X non-metallic enclosures:
a. Fiberglass construction.
b. Type 316 stainless steel reinforcing on the sides, top, and bottom.
c. All seams sealed.
d. Fiberglass hinges with no exposed metal parts.
e. Captivated Type 316 stainless steel door screws.
f. Provisions for internal, sidewall mounting panels either by welded channels to the interior, or by welded collar studs.
g. Provide aluminum mounting panels.
h. Non-metallic enclosures are not an acceptable substitute for Type 304 powder-coated stainless steel or Type 316 stainless steel unless indicated on the Drawings.
5. Outdoor panels. Supplementary requirements for panels located outdoors are as follows:
a. All enclosures located outdoors shall be explicitly designed and rated for outdoor service by the manufacturer.
b. Door hardware: Type 316 Stainless steel.
c. Provide factory installed rain canopy and sun shield for all enclosures with operator interface panels and any plastic exposed components.
d. Bases: Heavy channel, gasketed Type 316 stainless steel bases, flanges up, for anchoring to pad.

B. Arrangement of components:

1. Arrange panel internal components for external conduit and piping to enter into panel either from the side or below. No top penetrations are allowed.
2. Arrange panel instruments and control devices in a logical configuration, associating pushbutton and selector switches with related readout devices, or as indicated on the Drawings.
3. Mount internal control components on an internal back panel. Devices may be mounted on the side panel only by special permission from the Engineer & Owner.
4. All control panel mounted operator interface devices shall be mounted between 3 feet and 5 feet above finished floor.

C. Overcurrent protection:
1. Main overcurrent device:
   a. Where the electrical power supply voltage to the control panel is more than 120 VAC, provide the panel with a flange-mounted disconnect handle operating a molded-case circuit breaker and provide a control power transformer for 120-VAC circuits:
      1) Door-mounted disconnect handles are not acceptable.
      2) Mechanically interlock the disconnect switch with the control enclosure doors so that no door can be opened unless the power is disconnected, and the disconnect switch cannot be closed until all doors are closed.
      3) Provide means to defeat the interlock.
      4) Lockable in the off position.
   b. Control panels supplied with 120 VAC:
      1) Provide an internal breaker with the line side terminals covered by a barrier.
      2) Provide a nameplate prominently positioned on the control panel identifying the location of the power source and a warning statement requiring the source to be disconnected before opening the door to the enclosure.
2. Provide Low Voltage Molded Case Circuit Breakers as fabricated by manufacturers listed in Section 1.01.C.
3. Selection and ratings of protective devices:
   a. Interrupting ratings: Not less than the system maximum available fault current at the point of application.
   b. Voltage rating: Not less than the voltage of the application.
   c. Select current rating and trip characteristics to be suitable for:
      1) Maximum normal operating current.
      2) Inrush characteristics.
      3) Coordination of the protective devices to each other and to the source breaker feeding the panel.
4. Provide a separate protective device for each powered electrical device:
   a. An individual circuit breaker for each 120-VAC instrument installed within its respective control panel and clearly identified for function.
   b. An individual fuse for each PLC discrete output. Provide with individual blown fuse indication external of the I/O card:
      1) Size external fuse to open before any I/O-card-mounted fuses.
   c. Individual discrete inputs shall use a 1/2-ampere fuse.
      1) Control loops shall use a 5-ampere fuse.
   d. Install protective devices on the back-mounting panel and identify by a service nameplate in accordance with the wiring diagrams.
5. Fuses for 4-to- 20 milliamperes signals:

a. Provide durable, readily visible label for each fuse, clearly indicating the correct type, size, and ratings of replacement fuse:
   1) Label shall not cover or interfere with equipment manufacturer's instructions.
b. An individual 1/2-ampere fuse for each 4-to-20 milliamperes analog loop powered from the control panel.
c. Provide fuses rated for the voltage and available short-circuit current at which they are applied.
d. Manufacturers: One of the following or equal:
   1) Ferraz Shawmut.
   2) Littelfuse.
   3) Bussmann.

6. Fuse holders:
   a. Modular type:
      1) DIN rail mounting on 35-millimeter rail.
      2) Touch-safe design: All connection terminals to be protected against accidental touch.
      3) Incorporates blown-fuse indicator.
      4) Plug-in style fuse terminals and fuse plugs are not acceptable.
   b. Provide vinyl white self-laminating label identifying each fuse adhered to the fuse holder or adhered to the panel as appropriate. Use Brady labels.
   c. Manufacturers: One of the following or equal:
      1) Phoenix Contact, UT4-HESI Series.
      2) Allen-Bradley, 1492-FB Series B.
7. Control circuit breakers:
   a. DIN rail mounting on 35-millimeter rail.
   b. Manual OPEN-CLOSE toggle switch.
   c. Rated for 250 VAC.
   d. Interrupting rating: 10-kiloampere (kA) or available fault current at the line terminal, whichever is higher.
   e. Current ratings: As required for the application.
   f. Provide vinyl white self-laminating label identifying each breaker adhered to the panel. Use Brady labels.
   g. Manufacturers: One of the following or equal:
      1) Phoenix Contact, TMC Series.
      2) ABB.
      3) Allen-Bradley.
      4) Eaton.
      5) Square D.
8. Electronic circuit protectors:
   a. Used where equipment is equipped with a NEC Class 2 power supplies requiring 100 watts to 8 amps.
   b. DIN rail mounting on 35-millimeter rail.
   c. Rated for 24 VDC.
   d. 4 channels to feed 4 independent power feeds to separate devices.
   e. Output current ratings: As required for the application.
   f. LED input status indication.
   g. LED failure status of each channel indication.
   h. Fail contacts.

i. Provide vinyl white self-laminating label identifying each circuit breaker adhered to the panel as appropriate. Use Brady labels.
j. Manufacturers: One of the following or equal:
1) Rockwell Automation 1692-TD014.
2) Puls PISA11 series.

D. Conductors and cables:
1. Power and control wiring:
a. Materials: Stranded, soft annealed copper.
b. Insulation: 600-volts type MTW.
c. Minimum sizes:
1) Primary power distribution: 12 AWG.
2) Secondary power distribution: 14 AWG.
3) Control: 16 AWG.
d. Color:
1) AC power (line and load): Black.
2) AC power (neutral): White.
3) AC control: Red.
4) AC control: Orange for foreign voltages.
5) DC power and control (ungrounded): Blue.
6) DC power and control (grounded): White with Blue stripe.
7) Ground: Green.
2. Signal cables:
a. Materials: Stranded, soft annealed copper.
b. Insulation: 600-volts, PVC outer jacket.
c. Minimum size: 18 AWG paired triad.
d. Overall aluminum shield (tape).
e. Copper drain wire.
f. Color for 2-Conductor cables:
a) Positive (+): Black.
b) Negative (-): White and red.
g. Insulate the foil shielding and exposed drain wire for each signal cable with heat-shrink tubing.

E. Conductor identification:
1. Identify each conductor and cable with unique wire numbers utilizing vinyl white self-laminating label, identifying each conductor and cable, adhered in a wrapped fashion around each conductor and cable. Use Brady labels. Numbers on labels should be as specified in the drawings.
2. Readily identified without twisting the conductor.

F. General wiring requirements:
1. Wiring methods: Wiring methods and materials for panels shall be in accordance with the NEC requirements for General Purpose (no open wiring) unless otherwise specified.
2. Install all components in accordance with the manufacturer's instructions included in the listing and labeling.
3. Provide a nameplate on the bottom right corner of the cover of the control panel identifying all sources of power supply and foreign voltages within the control panel. Utilize stamped or etched 316 SS name plates, riveted in place.

4. Provide transformers, protective devices, and power supplies required to convert the supply voltage to the needed utilization voltage.
5. Provide power surge protection for all control panels.
6. Provide signal surge protection within control panels for each analog I/O, discrete I/O, and data line (Copper Ethernet, Coax, Fieldbus signals) that originates from outdoor devices.
7. Provide non-metallic ducts for routing and organization of conductors and cables:
   a. Provide wiring separation plan.
   b. Size ducts for ultimate build-out of the panel, or for 20-percent spare, whichever is greater.
   c. Provide separate ducts for signal and low-voltage wiring from power and 120-VAC control wiring:
      1) 120 VAC: Grey or White colored ducts.
      2) 24 VDC: White colored ducts.
8. Cables shall be fastened with cable-mounting clamps or with cable ties supported by any of the following methods:
   a. Screw-on cable tie mounts.
   b. Hammer-on cable-tie mounting clips.
   c. Fingers of the nonmetallic duct.
9. Wire ties:
   a. No wire ties inside wire duct.
   b. Use Panduit Cable tie installation tool, with tension control/cutoff.
   c. Verify cut ends are cut flush filed smooth after installed.
10. Provide supports at the ends of cables to prevent mechanical stresses at the termination of conductors.
11. Support panel conductors where necessary to keep them in place.
12. Wiring to rear terminals on panel-mount instruments shall be run in nonmetallic duct secured to horizontal brackets run adjacent to the instruments.
13. Conductors and cables shall be run from terminal to terminal without splice or joints. Exceptions:
    a. Factory-applied connectors molded onto cables shall be permitted. Such connectors shall not be considered as splices or joints.
14. The control panel shall be the source of power for all 120-VAC devices interconnected with the control panel including, but not limited to instruments both mounted in the control panel and remotely connected to the control panel.

G. Provide power circuits for all Contractor and Vendor-furnished PLC cabinets in accordance with the PLC and Instrument Power wiring diagrams Indicated on the Drawings or as specified.

1.05 CONTROL SWITCHES AND INDICATOR LIGHTS

A. Manufacturers
   1. Eaton.
   2. General Electric Company.
   3. Square D Company.
   4. Allen Bradley.

B. Substitutions: Product Substitutions must be preapproved by ERHWSC prior to beginning construction.

C. Control Switches
1. Contacts: NEMA ICS 2; at least two Form C contact sets.
2. Contact Ratings: NEMA ICS 2; 120V, 10 ampere inductive.
3. Selector Switch Operators: NEMA ICS 2; heavy-duty, oil tight, NEMA 3 multi-position rotary selector switch.
4. Push-button Operator: NEMA ICS 2; heavy-duty oil tight NEMA 4 unguarded and lockable type; black for start, red for stop.

D. Indicator Lights: Red for run, amber or yellow for alarm, green for control mode; LED, oil-tight, 100,000-hour rated life expectancy; rated voltage approximately 125 percent of nominal 120 VAC operating voltage. To be push-to-test type.

1.06 CONTROL RELAYS

A. Contacts: NEMA ICS 2; three Form C contact sets.

B. Rating: NEMA ICS 2; 120-volt, 10 ampere inductive.

C. Coil Voltage: 120-volt, 60 Hz AC, or 24-volt DC, 60 Hz DC as required.

D. Socket: Allen Bradley 700-H with coding system, label and label holder (11-pin).

E. Features: 11-pin tube socket relay base, external color-coded test button,

F. Mechanical and electrical status indications, impact-resistant thermoplastic case.

G. Manufacturer: Allen Bradley, or approved equal.

H. Spare Units: In addition to units installed, furnish 2 spare units.

1.07 TIME DELAY RELAYS

A. Contacts: NEMA ICS 2; three Form C contact sets.

B. Contact Ratings: NEMA ICS 2; DPDT Class; 120-volt 10 ampere inductive.

C. Coil Voltage: 120-volt 60 Hz AC.

D. Socket: Allen Bradley 700-H with coding system, label and label holder (11-pin).

E. Description: Control relay with added Time Cube Module as manufactured by Allen Bradley.; 700-HR, with on or off delay, as indicated.

F. Features: Dial-selectable timing ranges of 0.05 s to 300 hr.; externally adjustable graduated time dial; solid-state digital timing system.

G. Spare Units: In addition to units installed, furnish 2 spare units.

H. Starting of multiple pump motors shall utilize 15 second time delay to start each subsequent pump, in order to minimize the inrush current of the backup generator source.

1.08 PUMP MOTOR MONITORING AND CONTROL

A. Manufacturer and Model: FLYGT model MAS 711 or preapproved equal.

B. Operational system sensor perimeter includes:
1. Motor sensing via sub ca 24 lead cable:
a. Vibration
b. Water-in-Oil (Oil Housing)
c. Junction Box Leakage.
d. Stator Housing Leakage.
e. Support Bearing Temp.
f. Main Bearing Temp.
g. Stator Temp. PH3 Analog
h. Stator Temp. Ph2 Analog
i. Stator Temp. PH1 Analog
j. Stator Temp. Monitoring
k. Supply to pump memory.
2. Power analyzer module to indicate:
a. Pump motor current.
b. Current imbalance.
c. Voltage.
d. Voltage imbalance.
e. Power factor.

C. Provide connection from monitor module to operator panel, power analyzer, and communication system including PLC and Ethernet switch.

D. Confirm all wiring diagrams in writing with Pump supplier and motor control center supplier. Confirm that wiring diagrams are in accordance with pump supplier's instruction manuals.

1.09 PROGRAMMABLE LOGIC CONTROLLER (PLC)

A. Manufacturer and Product: Allen-Bradley Compact Logix Model 5380-; (with integral Ethernet, the latest version at the time of delivery); or preapproved equal, must be the latest series model and capable of Force-main or Duplex/Triplex downstream lift station controls.

B. Description: Modular Programmable Controller and Removable 2 MB Micro Memory Card.

C. Service Conditions
1. Temperature: 32 to 140 degrees F, horizontally installed.
2. Humidity: 5 to 95 percent, non-condensing.
3. Electromagnetic Compatibility: Noise suppression to EN 50082-2, Noise emission to EN50081-2.
4. Vibration: IEC 68, Part 2-6/10 to 58 Hz.
5. Shock: IEC 68, Part 2-27/half-sine: 15 g peak, 11 milliseconds.

D. Configuration
   1. Processor Rack: Include processor, power supply, micro memory card, communication modules, and input/output modules with front connectors.
   2. Expansion Unit: Include interface module, power supply, communication module, input/output modules, front connectors and necessary connection cables.
   3. Mounting Rail: Provide passive mounting rail for processor, power supply, communication, and input/output modules.

E. Processor Unit
   1. Studio 5000 environment and development tools
   2. Logix real-time control and Windows 10 Iot Enterprise operation system on single platform.

F. Power Supply
   1. Input: 85-132/170-264 VAC, switch-selectable.
   2. Output: 24 VDC, 10-amp.
   3. Mounting: On PLC Mounting Rail.
   4. Front Panel: Green status LED, On/Off Switch, Input Voltage Selector.
   5. Output Terminations: Screw terminations with connector to PLC CPU, plus additional terminations for wiring to other control system 24 VDC needs.

G. UPS: Provide complete, factory-assembled, wired, and tested, true on-line double conversion UPS equipment including, but not limited to, rectifier, DC bus, inverter, battery charger, batteries, automatic bypass, and ancillary components as specified in this Section and as indicated on the Drawings. UPS shall have the capacity to provide a minimum of 30 minutes of uninterruptible backup power to control panel power electronics/PLC.

H. Input/Output Units
   1. Spare Input/Output Capacity: At least 25 percent spare capacity of each I/O type installed.
   2. Discrete Input Characteristics: 16 points; 24 volts DC.
   3. Analog Input Characteristics: 8 channels for configurable in groups of 2,4 to 20 milliamperes DC.
   4. Discrete Output Characteristics: 16 points; Relay.
   5. Analog Output Characteristics: 8 channels, 4 to 20 milliamperes DC.
   6. RJ-45 jack I/O to interface with Ethernet switch.

I. Communication Interfaces for Remote Lift Station
   1. Ethernet Interface: Integral to CPU, 10/100 Mbps with automatic speed detection, supports open TCP/IP, PLC programming, HMI communications, ST Communications, Profinet CBA and Pronet IO-Controller.
   2. Ethernet Switch: Managed Industrial Ethernet Switch to be mounted in control panel and connected to PLCs with Ethernet interface.
      a. N-tron, Redlion
         1) Manufacturer and Model: N-tron, Redlion
         2) Electrical Ports: Eight RJ45, 10/100 Mbps, connectors latch to housing for strain relief.
         3) Power: Redundant 24 VDC
         4) Mounting: Standard DIN rail, PLC Rail
         5) Diagnostic Leds: Power, Link Status, Communications

6) Housing: Metal

b. Stratix 2500, Allen Bradley
   1) Manufacturer and Model: Stratix 2500, Allen Bradley
   2) Electrical Ports: Eight RJ45, 10/100 Mbps, connectors latch to housing for strain relief.
   3) Power: Redundant 24 VDC
   4) Mounting: Standard DIN rail, PLC Rail
   5) Diagnostic Leds: Power, Link Status, Communications
   6) Housing: Metal

J. Programming, Software and Programming Equipment
   1. Configure system and program for operation as specified in this Section. Program must be tested and certified by ERHWSC.
   2. System Software: Windows 10 software. Contractor to supply any other software or interfaces and cables needed to support equipment supplied on this project.
   3. Control Program: Contractor shall provide necessary programming modifications and enter the required variable parameters Allen Bradley Studio 5000 Program to provide a complete functional and integrated system. Contractor shall customize the generic software to meet site-specific conditions such as control functions, actual pump quantities, and sequence options. The system shall be fully tested to be operational prior to substantial completion.
   4. Contractor shall provide ERHWSC with LOGIX Designer PLC programing and HMI Interface software programming in a digital format on a flash drive.
   5. Control Program Data Sheet: Contractor shall complete and submit Lift Station Data Sheet. System I/O list shall be submitted with Data Sheet.

K. Spare Capacity: Provide at least 100 percent processor available memory, 25 percent spare rack space, and 25 percent spare I/O's configured, wired, terminated, and identified as such, but not used in the program.

L. Contractor will provide spare parts, which will include the following for each PLC furnished:
   1. One discrete input.
   2. One discrete output.
   3. One analog input.
   4. One analog output.
   5. One PLC power supply.
   6. One CPU with Ethernet ports.
   7. One of each Interface Module.
   8. Connections to radio transmitter.

M. Connect PLC inputs/outputs including analog inputs through snap-on isolated fused terminal blocks.

N. Separate the AC and control signals from DC and loop signals by at least 6 inches. Provide a barrier between AC and DC within the raceways.

1.19 INSTRUMENTATION

A. Level Measurement
   1. Endress + Hauser – Micropilot FMR20 (maximum measurement distance

32.8 FT).

2. Endress + Hauser – RIA15 for local level display.
3. Other instrumentation as required by Owner.

1.11 SPECIAL CONSIDERATIONS

A. Coordinate furnishing of auxiliary control items with all instrumentation and mechanical equipment to insure compatibility.

END OF SECTION

GENERAL NOTES

* PRIOR TO BEGINNING CONSTRUCTION, THE OWNER OR HIS AUTHORIZED REPRESENTATIVE SHALL SCHEDULE A PRECONSTRUCTION CONFERENCE BETWEEN THE CONSULTING ENGINEER, CONTRACTOR, EAST RIO HONDO WATER SUPPLY CORPORATION, AND ALL OTHER AFFECTED PARTIES.

* CONTRACTOR TO KEEP PUBLIC ROADS OPEN AT ALL TIMES. AREA USED FOR CONTRACTOR'S PERSONNEL PARKING, MATERIAL STORAGE, STOCKPILE, MATERIAL FABRICATION, AND RELATED CONSTRUCTION USES ARE NOT TO INTERFERE WITH NORMAL TRAFFIC.

* CONTRACTOR TO GIVE NOTICE IN WRITING TO ALL AUTHORIZED INSPECTORS, SUPERINTENDENTS, OR PERSONS IN CHARGE OF PRIVATE AND PUBLIC UTILITIES AFFECTED BY HIS OPERATIONS PRIOR TO COMMENCEMENT OF WORK.

* CONTRACTOR TO ASSURE HIMSELF THAT ALL CONSTRUCTION PERMITS HAVE BEEN OBTAINED PRIOR TO COMMENCEMENT OF WORK. REQUIRED PERMITS THAT CAN BE ISSUED ONLY TO CONTRACTOR TO BE OBTAINED AT HIS EXPENSE. NO SEPARATE PAY.

* UTILITY NOTE: THE LOCATIONS OF ALL EXISTING UTILITIES SHOWN ON THESE PLANS ARE BASED UPON RECORD INFORMATION ONLY, AND HAVE NOT BEEN INDEPENDENTLY VERIFIED BY THE OWNER OR THE ENGINEER. THE CONTRACTOR SHALL DETERMINE THE EXACT LOCATION, HORIZONTAL AND VERTICAL OF ALL EXISTING UTILITIES BEFORE COMMENCING WORK, AND AGREES TO BE FULLY RESPONSIBLE FOR ANY AND ALL DAMAGES WHICH MIGHT BE CAUSED BY THE CONTRACTOR'S FAILURE TO EXACTLY LOCATE AND PRESERVE ANY AND ALL UNDERGROUND UTILITIES, EXISTING OR ABANDONED. NO SEPARATE PAY.

* THROUGHOUT THE CONSTRUCTION, AND AT THE COMPLETION OF CONSTRUCTION, THE CONTRACTOR IS TO ASSURE THAT DRAINAGE OF STORM WATER RUNOFF IS NOT BLOCKED. MAINTAIN DRAINAGE OF SITE DURING ALL PHASES OF CONSTRUCTION. DO NOT BLOCK DRAINAGE FROM ADJACENT AREAS NOR ADD FLOW TO ADJACENT AREAS.

* THE CONTRACTOR SHALL NOTIFY ALL UTILITY COMPANIES AND THE OWNER 48 HOURS PRIOR TO BEGINNING OF CONSTRUCTION IN A PARTICULAR AREA. ALL WATER VALVES AND COVERS, MANHOLE TOPS & SANITARY SEWER CLEAN OUTS, ENCOUNTERED WITHIN THE PAVEMENT AREA (WHETHER SHOWN ON THE PLANS OR NOT) ARE TO BE ADJUSTED TO FINAL PAVEMENT GRADE. NO SEPARATE PAY. THIS ITEM SHALL BE SUBSIDIARY TO THE PAVEMENT WORK.

* DAMAGES DONE TO EXISTING UTILITIES, POWER POLES, FENCES, SIGNS, MAILBOXES, DRIVEWAYS, CULVERTS, PAVEMENT, DRAINAGE SYSTEMS, ETC., SHALL BE REPAIRED BY THE CONTRACTOR AT NO COST TO THE OWNER. DRIVEWAYS SHALL BE REPAIRED ON A LIKE FOR LIKE BASIS.

* ALL ABANDONED CARS SHALL BE REMOVED FROM THE CONSTRUCTION AREA. CONTRACTOR MUST FILE APPROPRIATE COMPLAINTS WITH THE SHERIFF DEPARTMENT TO HAVE THE SHERIFF DEPARTMENT REMOVE THE CARS.

* THE CONTRACTOR SHALL HAVE A PERSON ON CALL 24 HOURS A DAY TO TAKE CARE OF MAINTENANCE ITEMS–CONSTRUCTION AREA, SIGNS ETC. THIS PERSON SHALL HAVE AUTHORITY TO ACT ON BEHALF OF THE CONTRACTOR IN EMERGENCY CONDITIONS. THE PERSON SHALL BE STATIONED CLOSE ENOUGH TO BE ON SITE WITHIN 1/2 HOUR OF NOTIFICATION. THE PERSON SHALL BE IDENTIFIED IN WRITING PRIOR TO THE START OF CONSTRUCTION. THE ON–SITE REPRESENTATIVE SHALL HAVE ACCESS TO ALL EQUIPMENT AND MATERIAL AND HAVE FULL AUTHORITY NECESSARY TO CORRECT ANY PROBLEMS. DEFICIENCIES, OR EMERGENCIES WHICH MAY ARISE. DURING NON–WORKING HOURS, AND DURING THE ABSENCE OF THE SUPERINTENDENT.

* THE CONTRACTOR SHALL MAINTAIN ACCESS TO ALL RESIDENCES ALONG THE STREET DURING CONSTRUCTION.

* ALL EXISTING MAILBOXES WITHIN THE PROPOSED IMPROVEMENT AREAS ARE TO BE RELOCATED ONE FOOT BEHIND THE PROPOSED EDGE OF PAVEMENT. CONTRACTOR SHALL BE RESPONSIBLE FOR INSURING THAT MAILBOXES ARE NOT DAMAGED DURING CONSTRUCTION OR RELOCATION. MAILBOXES WILL BE TEMPORARILY RELOCATED AS REQUIRED BY THE US POSTAL SERVICE FOR THE DURATION OF CONSTRUCTION.

* EXCESS SPOIL PRODUCED DURING PREPARATION OF THE SUB–GRADE SHALL BE PLACED SPREAD AND COMPACTED ON–SITE IN AREAS AS INSTRUCTED BY THE ENGINEER TO ACHIEVE ADEQUATE LOT GRADING. ANY UNUSABLE MATERIAL WILL BECOME THE PROPERTY OF THE CONTRACTOR TO BE PROPERLY DISPOSED OF AT HIS EXPENSE OR TO HIS ADVANTAGE.

* THE CONTRACTOR WILL PROVIDE HIS OWN CONSTRUCTION STAKING.

* CONTRACTOR TO MATCH EXISTING PAVEMENT, SIDEWALK RAMPS AND CURB & GUTTER PAVEMENT OR ANY OTHER IMPROVEMENTS WHERE APPLICABLE.

* ALL CONCRETE AND ASPHALT DRIVEWAYS ADJUSTED, DAMAGED, OR REPLACED DURING CONSTRUCTION MUST BE SAW–CUT AT A STRAIGHT, NEAT LINE, BEFORE REPAIRING.

* ABANDONED LINES FOUND DURING CONSTRUCTION SHALL BE REMOVED. NO SEPARATE PAY. THIS WORK SHALL BE SUBSIDIARY TO THE PAVEMENT WORK.

* THE CONTRACTOR SHALL PLACE BARRICADES, FLAG–MEN, ETC. ON THIS PROJECT IN COMPLIANCE WITH THE PROCEDURE OUTLINED IN THE "TEXAS MANUAL ON UNIFORM TRAFFIC CONTROL DEVICES FOR STREET AND HIGHWAYS." (PART IV TRAFFIC CONTROLS FOR STREET AND HIGHWAY CONSTRUCTION AND MAINTENANCE OPERATIONS, LATEST REVISION). UPON COMPLETION OF THE WORK, ALL SIGNS SHALL BE REMOVED BY THE CONTRACTOR.

* REFERENCE POINTS: THE ENGINEER WILL ESTABLISH HORIZONTAL AND VERTICAL CONTROLS ONLY (REFERENCE POINTS AND BENCHMARKS AS SHOWN ON THE CONSTRUCTION PLANS. THE CONTRACTOR MUST NOTIFY THE ENGINEER AT LEAST 48 HOURS PRIOR TO STARTING WORK ON ANY SECTION OR PART OF THE WORK WHERE CONTROLS HAVE NOT BEEN ESTABLISHED OR ARE NOT IDENTIFIABLE OR VISIBLE TO THE CONTRACTOR. THE ENGINEER WILL UPON SUCH ADVANCE REPLACE ANY CONTROL POINTS THAT HAVE BEEN DESTROYED BY OTHERS PRIOR TO BEGINNING OF CONTRACTORS OPERATIONS. AFTER CONTROL POINTS ARE ESTABLISHED AND / OR IDENTIFIED AS OUTLINED ABOVE, MAINTENANCE OF SUCH CONTROL POINTS SHALL BE RESPONSIBILITY OF THE CONTRACTOR. ANY RE–STAKING REQUIRED FOR ANY REASON THEREAFTER SHALL BE THE RESPONSIBILITY OF THE CONTRACTOR. THE CONTRACTOR WILL PROVIDE ALL OTHER CONSTRUCTION STAKING (CUT STAKES, BLUE TOPPING, INTERMEDIATE STRING LINE CONTROL, ETC.) REQUIRED TO VERIFY GRADES, DEPTHS THICKNESSES, AND ALIGNMENT OF THE VARIOUS ITEMS OF CONSTRUCTION.

* CONCRETE CURB AND GUTTER, PIPE (WHICH IS DETERMINED BY THE RESIDENT INSPECTOR TO BE UNUSABLE) STRUCTURES, ETC. WHICH MUST BE REMOVED IN ORDER TO CONSTRUCT THE PROPOSED IMPROVEMENTS WILL BECOME THE PROPERTY OF THE CONTRACTOR AND SHALL BE REMOVED AND PROPERLY DISPOSED OF AT HIS EXPENSE. THIS WORK SHALL BE CONSIDERED SUBSIDIARY TO THE VARIOUS BID ITEMS IN THE CONTRACT.

* ALL WATER VALVES AND COVERS, MANHOLE TOPS AND SANITARY SEWER CLEAN OUTS, ENCOUNTERED WITHIN THE PAVEMENT AREA (WHETHER SHOWN ON THE PLANS OR NOT) ARE TO BE RAISED TO FINAL PAVEMENT GRADE. PAYMENT FOR SUCH WORK WILL BE SUBSIDIARY TO THE PAVEMENT BID ITEMS PROVIDED.

* EXISTING UTILITIES: THE CONTRACTORS OPERATIONS MUST BE CONDUCTED TO PREVENT UNNECESSARY INTERFERENCE WITH ANY EXISTING UTILITY SYSTEM. IF THE CONTRACTOR'S WORK REQUIRES INTERRUPTION, THE CONTRACTOR MUST COORDINATE WITH UTILITY COMPANIES EFFECTED 48 HOURS IN ADVANCE.

* MATERIALS CERTIFICATION AND TESTING: CONTRACTOR SHALL PROVIDE SUPPLIERS CERTIFICATION FOR ALL PROJECT MATERIALS CONCRETE, LIME, CALICHE BASE MATERIAL, PRE–CAST INLETS, PIPES, ETC. THAT SUCH MATERIALS DO MEET PROJECT SPECIFICATIONS PRIOR TO DELIVERY ON–SITE. CONTRACTOR SHALL PROVIDE HOT MIX ASPHALTIC CONCRETE DESIGN FROM A REPUTABLE COMMERCIAL TESTING LABORATORY. OWNER WILL PROVIDE ALL ON–SITE TESTING OF MATERIALS AND FIELD DENSITIES. ANY RE–TESTING DUE TO FAILURE OF INITIAL TESTING WILL BE CHARGED TO THE CONTRACTOR.

* STANDARD WORK HOURS: THE STANDARD WORK HOURS FOR THE OWNER IS 8:00 AM TO 5:00 PM, MONDAY THROUGH FRIDAY. SHOULD THE CONTRACTOR ELECT TO WORK ON SATURDAY, SUNDAYS OR HOLIDAYS, HE SHALL BE RESPONSIBLE FOR PAYING OVERTIME CHARGES FOR THE OWNERS PERSONNEL INVOLVED. THESE CHARGES WILL BE AT COST AND WILL BE CALCULATED EITHER AT TIME AND A HALF OR DOUBLE TIME, AS APPLICABLE TO THE PARTICULAR DAY BEING WORKED. PRE–APPROVAL SHALL BE OBTAINED FROM THE ENGINEER OR ENGINEER'S REPRESENTATIVE BY COMPLETING AND SIGNING AN OWNER'S FORM ENTITLED "CONSTRUCTION INSPECTORS OVERTIME COMPENSATION AUTHORIZATION", PRIOR TO COMMENCING ANY OVERTIME WORK.

ANY WORK DONE OUTSIDE THE STANDARD WORKDAY, WITHOUT PRIOR AUTHORIZATION, SHALL BE CONSIDERED UNDER UNAUTHORIZED WORK. THE CONTRACTOR IS REQUIRED TO PAY THE OVERTIME WAGES OF THE OWNER INSPECTORS THAT WORK OVERTIME MONDAYS THROUGH FRIDAYS AT TIME AND A HALF. THE CONTRACTOR IS RESPONSIBLE FOR THE OVERTIME WAGES OF THE OWNER INSPECTORS THAT WORK HOLIDAYS AT DOUBLE TIME. MINIMUM HOURS WILL BE BILLED TO CONTRACTOR FOR CALL OUTS OR FOR INSUFFICIENT NOTICE OF TWO (2) HOURS.

* INDEMNIFICATION
TO THE FULLEST EXTENT PERMITTED BY APPLICABLE LAWS AND REGULATIONS, CONTRACTOR SHALL INDEMNIFY AND HOLD HARMLESS OWNER, ENGINEER, ENGINEER'S SUB CONSULTANTS AND THE OFFICERS, DIRECTORS, EMPLOYEES, AGENTS, AND OTHER CONSULTANTS OF EACH AND ANY OF THEM FROM AND AGAINST ALL CLAIMS, COSTS, LOSSES, AND DAMAGES (INCLUDING BUT NOT LIMITED TO ALL FEES AND CHARGES OR ENGINEERS, ARCHITECTS, ATTORNEYS, AND OTHER PROFESSIONALS AND ALL COURT OR ARBITRATION OR OTHER DISPUTE RESOLUTION COSTS) CAUSED BY, ARISING OUT OF, OR RESULTING FROM, THE PERFORMANCE OF THE WORK, PROVIDED THAT ANY SUCH CLAIM, COST, LOSS OR DAMAGE: (I) IS ATTRIBUTABLE TO BODILY INJURY, SICKNESS, DISEASE, OR DEATH, OR TO INJURY TO OR DESTRUCTION OF TANGIBLE PROPERTY (OTHER THAN THE WORK ITSELF), INCLUDING THE LOSS OF USE RESULTING THEREFROM, AND (II) IS CAUSED IN WHOLE OR IN PART BY ANY NEGLIGENT ACT OR OMISSION OF CONTRACTOR, ANY SUBCONTRACTOR, ANY SUPPLIER, ANY PERSON, OR ORGANIZATION DIRECTLY OR INDIRECTLY EMPLOYED BY ANY OF THEM TO PERFORM OR FURNISH ANY OF THE WORK, OR ANYONE FOR WHOSE ACTS ANY OF THEM MAY BE LIABLE, REGARDLESS OF WHETHER OR NOT CAUSED IN PART BY ANY NEGLIGENCE OR OMISSION OF A PERSON OR ENTITY INDEMNIFIED HEREUNDER OR WHETHER LIABILITY IS IMPOSED UPON SUCH INDEMNIFIED PARTY BY LAWS AND REGULATIONS REGARDLESS OF THE NEGLIGENCE OF ANY SUCH PERSON OR ENTITY. CLAIMS, COSTS, LOSSES, DAMAGES, SUITS AND CAUSES OF ACTION, AND ANY AND ALL LIABILITY, COSTS, EXPENSES, SETTLEMENTS, DAMAGES, AND JUDGMENTS INCURRED IN CONNECTION THEREWITH (INCLUDING BUT NOT LIMITED TO ALL FEES AND CHARGES OF ENGINEERS, ARCHITECTS, ATTORNEYS, AND OTHER PROFESSIONALS, AND ALL COURT OR ARBITRATION OR OTHER DISPUTES RESOLUTION COSTS) WHETHER ARISING IN EQUITY, AT COMMON LAW, OR BY STATUTE, INCLUDING THE TEXAS DECEPTIVE TRADE PRACTICES ACTOR SIMILAR STATUTE OF OTHER JURISDICTIONS, OR UNDER THE LAW OF CONTRACTS, TORTS (INCLUDING WITHOUT LIMITATION, NEGLIGENCE AND STRICT LIABILITY WITHOUT REGARD TO FAULT) OR PROPERTY, OF EVERY KIND OR CHARACTER… (III) IS CAUSED IN WHOLE OR IN PART BY ANY NEGLIGENT ACT OR OMISSION, OTHER FAULT, BREACH OF CONTRACT OR WARRANTY, VIOLATION OF THE TEXAS DECEPTIVE TRADE PRACTICES ACT, OR STRICT LIABILITY WITHOUT REGARD TO FAULT OF CONTRACTOR…. REGARDLESS OF WHETHER OR NOT CAUSED IN PART BY ANY NEGLIGENCE OR OMISSION, OTHER FAULT, BREACH OF CONTRACT OR WARRANTY, VIOLATION OF THE TEXAS DECEPTIVE TRADE PRACTICES ACT, OR STRICT LIABILITY WITHOUT REGARD TO FAULT OF A PERSON OR ENTITY INDEMNIFIED THEREUNDER. CONTRACTOR'S OBLIGATIONS OF INDEMNIFICATION UNDER THIS PARAGRAPH 6.20.1 SHALL NOT BE LIMITED BY THE AMOUNT OF ANY INSURANCE.

* AS BUILT DRAWINGS: THE CONTRACTOR IS RESPONSIBLE FOR MAINTAINING A SET OF AS–BUILT PLANS SHOWING NOTES TO ANY CHANGES TO THE DESIGN PLANS. THIS INFORMATION, SIGNED BY ALL INSPECTORS, WILL BE SUBMITTED TO THE ENGINEER AT THE END OF CONSTRUCTION. THE PROJECT'S FINAL ACCEPTANCE AND FINAL PAYMENT WILL NOT BE APPROVED UNTIL THE CONTRACTOR HAS SUBMITTED THE REQUIRED INFORMATION NEEDED BY THE ENGINEER FOR AS–BUILT DRAWINGS.

CONCRETE MIX DESIGN

* CLARIFICATION: ALL CONCRETE USED ON THIS PROJECT SHALL CONTAIN A MINIMUM 4.5 SACKS OF CEMENTITIOUS MATERIAL PER CUBIC YARD OF CONCRETE. THE CEMENTITIOUS MATERIAL SHALL BE PORTLAND CEMENT OR A BLEND OF PORTLAND CEMENT AND FLY ASH. THE PERCENTAGE OF FLY ASH IN THE CEMENTITIOUS MATERIAL SHALL NOT EXCEED 23%. ALL CONCRETE USED IN CONCRETE CURB AND GUTTER AND VALLEY GUTTERS SHALL MEET THE ABOVE SPECIFICATION AND SHALL ALSO CONTAIN 1.5 POUNDS OF FIBER MESH PER CUBIC YARD.

* ALL EXPOSED CONCRETE SURFACES SHALL BE TREATED WITH CURING COMPOUND RESIN BASE ASTM C 309 TYPE 2 WITH PIGMENTED TINT OF FUGITIVE DYE.

* IN ADDITION TO THE ABOVE REQUIREMENTS, ALL CONCRETE SHALL TEST TO A MINIMUM 3000 PSI COMPRESSIVE STRENGTH AT 28 DAYS. (OR AS SHOWN ON PLANS).

* EXPANSION JOINTS WILL BE PLACED AT CURB RETURNS, INLETS AND AT THE END OF EACH POUR WITH INTERVALS NOT TO EXCEED 40 FT. JOINTS SHALL CONSIST OF 1/2" PRE–MOLDED EXPANSION JOINT MATERIAL WITH 3, 36" X 1/2" DOWELS, ONE END GREASED AND WRAPPED. CARE MUST BE TAKEN THAT DOWELS ARE STRAIGHT AND LAID PARALLEL WITH CURB AND NO CONCRETE PLUGS OR OTHER MATERIAL BE ALLOWED THROUGH THE DOWEL HOLES OR EXPANSION MATERIAL WHICH WOULD PREVENT THE JOINT FROM OPERATION AS AN EXPANSION JOINT. EXPANSION JOINT MATERIALS SHALL BE PRE–MOLDED ASPHALT IMPREGNATED EXPANSION JOINT MATERIAL CONFORMING WITH ASTM D 994 (NOT WOOD FIBER TYPE)

* DUMMY JOINTS SHALL BE 2" DEEP AND PLACED AT MAXIMUM 10 FT. INTERVALS.

* WHEN CONNECTING TO EXISTING CURB AND GUTTER, THE CONTRACTOR SHALL DRILL AND DOWEL TWO, # 6 X 16" TIE BARS A MINIMUM OF 6" DEEP INTO EXISTING CURB AND GUTTER SECTION.

PAVING NOTES:

CRUSHED LIMESTONE:

THE CRUSHED LIMESTONE MATERIALS SHALL BE AS SPECIFIED BY "ITEM 247 FLEXIBLE BASE." TEXAS DEPARTMENT OF TRANSPORTATION, 1993 STANDARD SPECIFICATION FOR CONSTRUCTION OF HIGHWAYS, STREETS, AND BRIDGES SHALL MEET THE REQUIREMENTS AS FOLLOWS:

* TYPE A MATERIAL SHALL BE CRUSHED STONE PRODUCED FROM OVERSIZE QUARRIED AGGREGATE, SIZED BY CRUSHING AND PRODUCED FROM A NATURALLY OCCURRING SINGLE SOURCE. CRUSHED GRAVEL OR UNCRUSHED GRAVEL SHALL NOT BE ACCEPTABLE FOR TYPE A MATERIAL. NO BLENDING OF SOURCES AND/OR ADDITIVE MATERIALS WILL BE ALLOWED IN TYPE A MATERIAL.

* TRIAXIAL CLASS 1: MINIMUM COMPRESSIVE STRENGTH, 45 AT OPSI LATERAL PRESSURE AND 175 AT 15 PSI LATERAL PRESSURE.

RETAINED ON SQUARE SIEVE NUMBER	PERCENT RETAINED
1–3/4" (44 MM)	0
7/8" (22.23 MM)	10–35
3/8" (9.5 MM)	30–50
NUMBER 4 (4.75 MM)	45–65
NUMBER 40 (0.425 MM)	70–85

MATERIAL PASSING THE NUMBER 40 SIEVE SHALL BE KNOWN AS "BINDER MATERIAL" AND SHALL MEET THE FOLLOWING REQUIREMENTS:

MAXIMUM LIQUID LIMIT (LL)	=	35
MAXIMUM PLASTICITY INDEX (PI)	=	10
WET BALL MILL (MAX)	=	40
CALIFORNIA BEARING RATIO (MIN)	=	100

ALL AGGREGATE RETAINED ON THE NUMBER 10 SIEVE SHALL BE COMPRISED OF ONLY CRUSHED LIMESTONE.

THE CONTRACTOR SHALL NOT PLACE CRUSHED LIMESTONE ON THE ROAD BED UNTIL THE ENGINEER HAS ACCEPTED THE SHAPED AND COMPACTED SUBGRADE.

THE CONTRACTOR MUST MAINTAIN THE ROAD BED FREE OF HOLES, RUTS AND DEPRESSIONS AND IN CONDITION TO RECEIVE THE CRUSHED LIMESTONE.

THE CONTRACTOR UPON REQUEST SHALL PROVIDE CERTIFICATION THAT THE MATERIAL SUPPLIED MEETS THE ABOVE REQUIREMENTS PRIOR TO DELIVERY TO THE JOB SITE. SAMPLES FOR TESTING OF THE MATERIAL MUST BE TAKEN PRIOR TO THE COMPACTION OPERATIONS.

CALICHE FLEXIBLE BASE:

CALICHE MATERIALS SHALL BE AS SPECIFIED BY "ITEM 247 FLEXIBLE BASE GRADE 2." TEXAS DEPARTMENT OF TRANSPORTATION, 2004 STANDARD SPECIFICATION FOR CONSTRUCTION OF HIGHWAYS, STREETS, AND BRIDGES SHALL MEET THE REQUIREMENTS AS FOLLOWS:

* MINIMUM OF 50 CBR SHALL BE ACHIEVED.

RETAINED ON SQUARE SIEVE NUMBER	PERCENT RETAINED
1/2"	0
1 3/4"	0–10
NUMBER 4	45–75
NUMBER 40	60–80

MATERIAL PASSING THE NUMBER 40 SIEVE SHALL BE KNOWN AS "BINDER MATERIAL" AND SHALL MEET THE FOLLOWING REQUIREMENTS:

MAXIMUM LIQUID LIMIT (LL)	=	40
MAXIMUM PLASTICITY INDEX (PI)	=	12
WET BALL MILL (MAX)	=	45%
WET BALL MILL (INCREASE PASSING #40 SIEVE)	=	20%

ACCEPTANCE, SAMPLING, AND TESTING OF BITUMINOUS MIXTURE (COMPACTION)

* EXTRACTION AND GRADATION ANALYSIS: PER 500 TONS OR TWICE DAILY WHICHEVER IS GREATER.

* DENSITY AND DEPTH TESTING: PER 500 FEET OF PAVING REPAIR.
MINIMUM DENSITY ACCEPTED: 92% OF AVERAGE MAXIMUM THEORETICAL DENSITY AS DETERMINED IN ACCORDANCE WITH ASTM D 2041.

CORES OR SAWED SAMPLES TAKEN FROM THE PAVEMENT SHALL BE USED TO DETERMINE THE FIELD DENSITY. DENSITY OF THE CORED OR SAWED SAMPLES SHALL BE DETERMINED IN ACCORDANCE WITH ASTM 2725. THE SAME SPECIMEN SHALL BE USED FOR DETERMINING BOTH THE MAXIMUM THEORETICAL DENSITY AND THE FIELD DENSITY.

SPECIMENS TO BE USED FOR FIELD DENSITY DETERMINATION SHALL BE DONE USING HEAT. IF HEATING IS NECESSARY, THE SPECIMEN SHOULD BE HEATED TO THE LOWEST TEMPERATURE REQUIRED FOR PROPER PREPARATION OF THE SAMPLE; THE USE OF NUCLEAR FIELD DENSITY DETERMINATION SHALL NOT BE USED AS A BASIS FOR ACCEPTANCE WITH RESPECT TO DENSITY :

* HVEEM STABILITY SHALL NOT BE LESS THAN 30%. STABILITY TEST SHALL BE TAKEN TWICE DAILY.

* RETAINED STABILITY WHEN TESTED IN ACCORDANCE WITH ASTM D 1075 SHALL NOT BE <70%

* NO MORE THAN 2½" HMAC PAVEMENT SHALL BE LAID AT ANY GIVEN TIME. UNLESS APPROVAL IS OBTAINED AHEAD BY THE OWNER / ENGINEER.

YARD LINE NOTES

THE CONTRACTOR SHALL VERIFY WITH ERHWSC THAT A CUSTOMER SERVICE INSPECTION HAS BEEN CONDUCTED AND THE RESIDENCE IS APPROVED FOR HOOK UP PRIOR TO BEGINNING ANY WORK ON PRIVATE PROPERTY. ERHWSC OR THE ENGINEER'S INSPECTOR SHALL BE PRESENT FOR ALL YARDLINE CONNECTIONS.

ONE–YEAR WARRANTY ALSO APPLIES TO THE YARDLINE HOOK UPS. THE CUSTOMER WILL BE RESPONSIBLE AFTER THE ONE–YEAR WARRANTY HAS EXPIRED.

YARDLINE PIPING SHALL BE SCHEDULE 40 PVC.

A MASTER LICENSED PLUMBER MUST MAKE CONNECTION TO CUSTOMERS WATER SERVICE CONNECTION.

CONTRACTOR SHALL FOLLOW THE SAFE WATER DRINKING ACT OF 1974 (CHAPTER 290) AS ADMININSTERED BY THE TCEQ.

CONTRACTOR SHALL CUT THE EXISTING WATER WELL FEED LINE AND INSTALL A HOSE BIB A MINIMUM OF 24–INCHES ABOVE NATURAL GROUND. THE HOSE BIB SHALL BE SECURED TO A 4" X 4" POST (EMBEDDED A MINIMUM OF 24–INCHES DEEP).

IT IS THE CONTRACTOR'S RESPONSIBILITY TO VERIFY AND CONNECT TO THE NEAREST 3/4–INCH WATER OUTLET TO MAINTAINT PROPER WATER FLOW. THE CONTRACTOR SHALL VERIFY ALL THE SOURCES OF WATER SUPPLY INTO THE HOUSE AND VERIFY ANY CROSS CONNECTIONS. IF MULTIPLE CONNECTIONS OR CROSS CONNECTIONS ARE FOUND THE CONTRACTOR SHALL NOTIFY ERHWSC PRIOR TO CONNECTING THE HOUSE TO THE PUBLIC WATER SYSTEM.

CONTRACTOR SHALL CALL ALL NECESSARY UTILITY COMPANIES PRIOR TO THE INSTALLATION OF PROPOSED YARDLINES. IF NECESSARY, THE CONTRACTOR SHALL HAND DIG YARDLINES TO AVOID DAMAGE TO UTILITES OR PRIVATE PROPERTY. CONTRACTOR IS RESPONSIBLE FOR ALL DAMAGES TO PRIVATE PROPERTY OR UTILITIES.

STORM WATER PREVENTION PLAN NOTES:

1) THE CONTRACTOR SHALL BE RESPONSIBLE FOR ALL THE COSTS ASSOCIATED WITH THE DEVELOPMENT OF A STORM WATER POLLUTION PREVENTION PLAN MEETING THE MOST RECENT TPDES REQUIREMENTS.

2) THE CONTRACTOR SHALL BE RESPONSIBLE FOR ALL THE COSTS ASSOCIATED WITH THE IMPLEMENTATION, MAINTENANCE, AND INSPECTION OF STORM WATER POLLUTION PREVENTION CONTROL MEASURES INCLUDING, BUT NOT LIMITED TO, EROSION AND SEDIMENT CONTROLS, STORM WATER MANAGEMENT PLANS, WASTE COLLECTION AND DISPOSAL, OFF–SITE VEHICLE TRACKING, AND OTHER CONSTRUCTION PRACTICES.

3) AT A MINIMUM, EROSION CONTROL DEVICES SHALL BE INSTALLED IN THE ROADSIDE SWALE AT INTERVALS NOT EXCEEDING 500–FEET AND AT EVERY ENTRANCE TO DRAINAGE STRUCTURES. THE OWNER AND HIS REPRESENTATIVES HAVE THE RIGHT TO REQUEST THE CONTRACTOR TO INSTALL ADDITIONAL EROSION CONTROL DEVICES IF DEEMED NECESSARY.

4) PERMANENT STABILIZATION UPON COMPLETION OF THE FINAL GRADING, THE CONTRACTOR SHALL HYDROMULCH ALL DISTURBED AREAS WITHIN THE STATE AND COUNTY R.O.W. THE CONTRACTOR SHALL HYDROMULCH DISTURBED AREAS IN DEVELOPED PRIVATE PROPERTY AT A RATE OF 1 LB. PER 1000 SQUARE FEET OF UNHULLED BERMUDA SEED. DISTURBED AREAS IN UNDEVELOPED PRIVATE PROPERTY DOES NOT REQUIRE HYDROMULCHING.

CLEARING AND GRUBBING:

1) THE CONTRACTOR SHALL BE RESPONSIBLE FOR THE REMOVAL OF ALL VEGETATION AS REQUIRED TO INSTALL THE PROPOSED IMPROVEMENTS HOWEVER, THE CONTRACTOR SHALL MINIMIZE THE REMOVAL TO WHAT IS NECESSARY FOR THE INSTALLATION OF THE IMPROVEMENTS.

2) THE CONTRACTOR SHALL PROTECT VEGETATION THAT IS NOT REQUIRED TO BE REMOVED.

3) ALL DEBRIS REMOVED SHALL BECOME THE PROPERTY OF THE CONTRACTOR AND SHALL BE REMOVED FROM THE PROJECT SITE AT HIS OWN EXPENSE.

4) HOLES REMAINING AFTER REMOVAL OF VEGETATION SHALL BE BACKFILLED WITH APPROVED MATERIAL COMPACTED AND RESTORED TO ORIGINAL NATURAL GROUND ELEVATION.

5) THE CONTRACTOR SHALL COORDINATE WITH E.R.H.W.S.C. PRIOR TO THE REMOVAL OF ANY PLANTED CROPS.

ERHWSC STANDARD DETAILS

CAMERON COUNTY, TEXAS

ERH WSC
East Rio Hondo Water Supply Corporation

Revision		
No.	Date	Description
1		

Project No.:
Issued:
Drawn By:
Checked By:
Scale:
Sheet Title
GENERAL NOTES

1
Sheet Number

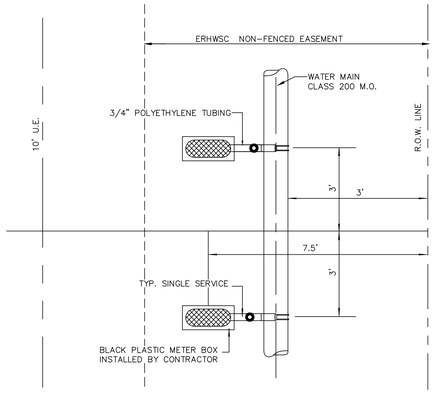

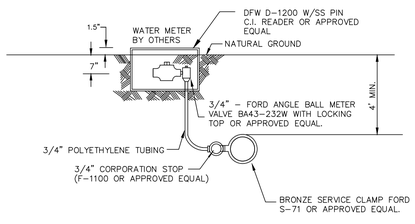

TYPICAL SINGLE WATER SERVICE CONNECTION
(NEAR SIDE)
N.T.S.

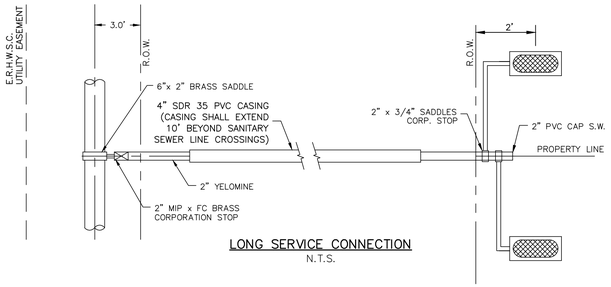

LONG SERVICE CONNECTION
N.T.S.

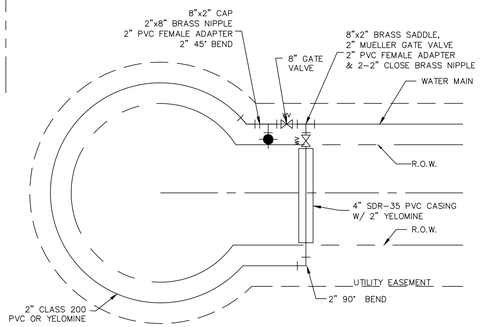

CUL DE SAC PLAN VIEW
N.T.S.

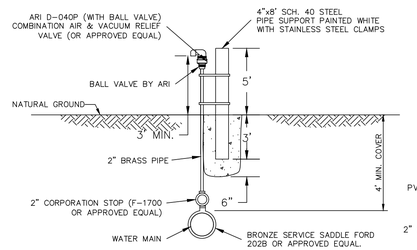

AIR RELEASE VALVE
N.T.S.

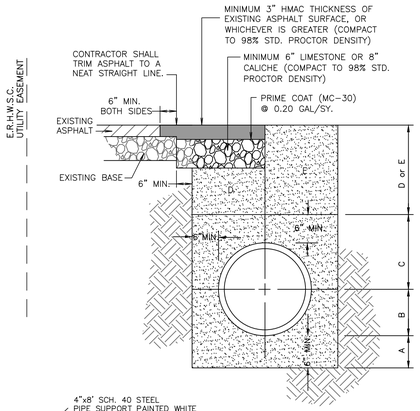

STANDARD PIPE BEDDING
N.T.S.

A. BANKRUN SAND BACKFILL (SP, SW OR SM AS PER ASTM D2487) PLACED BEFORE PIPE IS LAID UP TO FLOWLINE OF PIPE. (MINIMUM DEPTH OF 6")

B. BANKRUN SAND BACKFILL (SP, SW OR SM AS PER ASTM D2487) PLACED AFTER PIPE IS LAID FROM BOTTOM OF PIPE TO SPRING LINE OF PIPE AND HAND TAMPED OR WATER JETTED IN 4" LIFTS.

C. BANKRUN SAND (SP, SW OR SM AS PER ASTM D2487) PLACED FROM SPRING LINE OF PIPE TO A LEVEL OF 6" ABOVE TOP OF PIPE IN 8" LAYERS HAND TAMPED OR WATER JETTED IN.

D. BANKRUN SAND (SP, SW OR SM AS PER ASTM D2487) OR SELECT EARTH BACKFILL CLASS "A" MECHANICAL COMPACTION. (6" LIFTS) (WHERE LOCATED UNDER FUTURE PAVEMENT). COMPACTED TO 95% STD. PROCTOR DENSITY (MIN.)

E. EARTH BACKFILL CLASS "B" MECHANICAL COMPACTION. (8" LIFTS OR WATER JETTING AT 18" LIFTS WHERE NOT UNDER FUTURE PAVEMENT). COMPACTED TO 90% STD. PROCTOR DENSITY (MIN.)

F. FOUNDATION PREPARATION (WELLPOINTS, GRAVEL OR CEMENT STABILIZATION OR APPROVED SUBSTITUTE) SHALL BE REQUIRED WHEN TRENCH BOTTOM IS UNSTABLE.

NOTE:

ALL TRENCHES AND EXCAVATIONS SHALL BE BACKFILLED IMMEDIATELY AFTER PIPE IS LAID THEREIN AND UNDER NO CIRCUMSTANCE SHALL WATER BE PERMITTED TO RISE IN UNBACKFILLED TRENCHES AFTER PIPE HAS BEEN PLACED. THE CONTRACTOR SHALL PROVIDE BANKRUN SAND UP TO THE SPRING LINE AND THE REMAINING TRENCH WITH BANKRUN SAND PLACED AND COMPACTED WITH MECHANICAL TAMPERS IN EIGHT INCH (8") LIFTS WITH SUFFICIENT MOISTURE ADDED, IF NECESSARY, TO PROVIDE A DENSITY EQUAL TO THE ADJACENT UNDISTRIBUTED EARTH (95%).

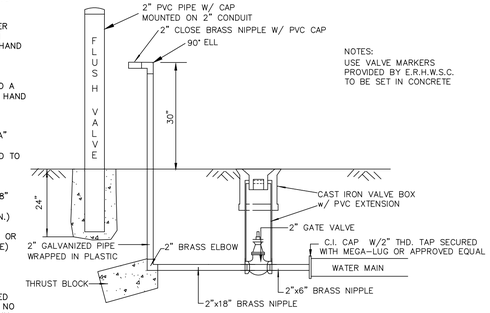

NOTES:
USE VALVE MARKERS PROVIDED BY E.R.H.W.S.C. TO BE SET IN CONCRETE

FLUSH VALVE DETAIL W/2" VALVE
WATER LINE CONSTRUCTION
N.T.S.

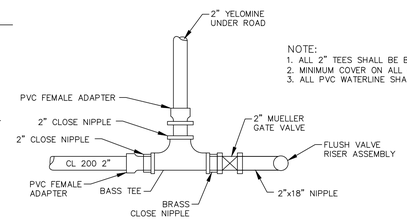

NOTE:
1. ALL 2" TEES SHALL BE BRASS FITTINGS.
2. MINIMUM COVER ON ALL WATERLINES = 48"
3. ALL PVC WATERLINE SHALL BE WHITE

FLUSH VALVE DETAIL ON 2" LINE IN CUL DE SAC
N.T.S.

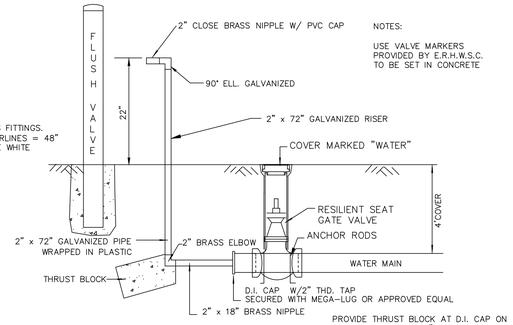

NOTES:
USE VALVE MARKERS PROVIDED BY E.R.H.W.S.C. TO BE SET IN CONCRETE

PROVIDE THRUST BLOCK AT D.I. CAP ON LINES LARGER THAN 6"

FLUSH VALVE ON FULL SIZE LINE VALVE DETAIL
WATER LINE CONSTRUCTION
N.T.S.

NOMINAL PIPE SIZE	CASING SIZE	THICKNESS
6"	12"	1/4
8"	16"	5/16
12"	20"	3/8
16"	24"	7/16

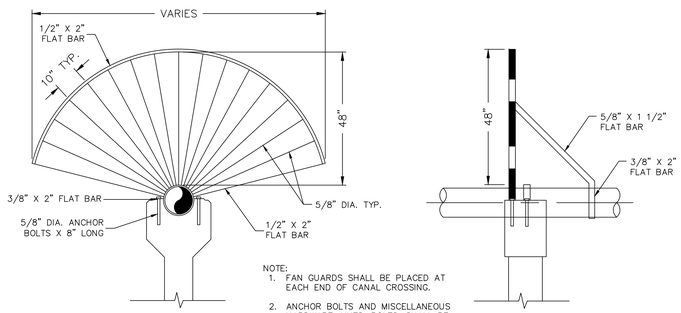

NOTE:
1. FAN GUARDS SHALL BE PLACED AT EACH END OF CANAL CROSSING.
2. ANCHOR BOLTS AND MISCELLANEOUS HARDWARE, NUTS, BOLTS, SHALL BE 304 OR 316 STAINLESS STEEL.
3. FANGUARD & ACCESSORIES SHALL BE FABRICATED FROM HOT DIPPED GALVANIZED STEEL.

ACCESS BARRIER
N.T.S.

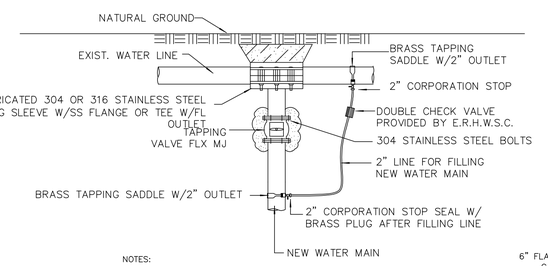

NOTES:
1. THIS METHOD SHALL ALSO BE USED AT A NEW CONSTRUCTION TO AN EXISTING DEAD END LINE.
2. AFTER THE NEW LINE HAS BEEN DISINFECTED & PRESSURIZED, THE VALVE AT THE CONNECTION TO THE EXISTING LINE SHALL OPENED BY ERHWSC TO THOROUGHLY FLUSH OUT THE LINE.

METHOD FOR FILLING NEW WATER LINES PRIOR TO CHLORINATION AND TESTING
N.T.S.

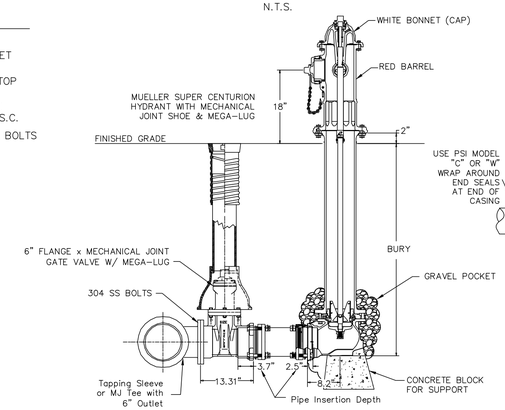

FIRE HYDRANT ASSEMBLY
N.T.S.

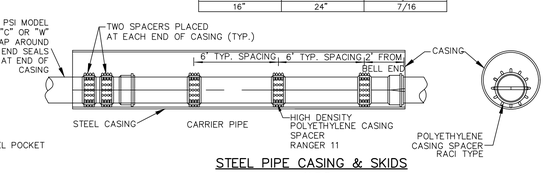

STEEL PIPE CASING & SKIDS
N.T.S.

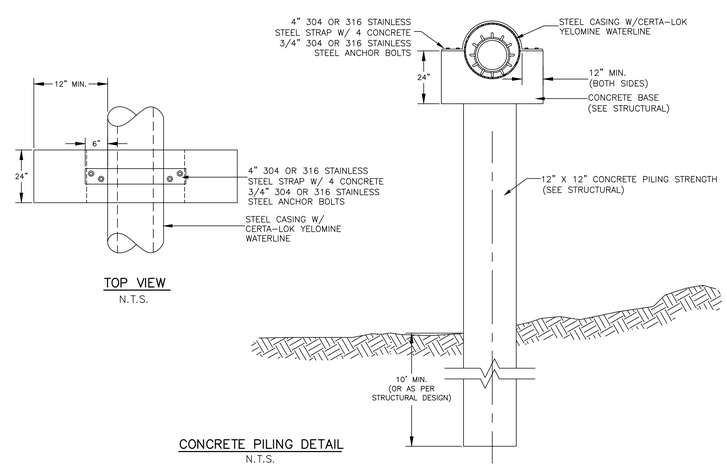

TOP VIEW
N.T.S.

CONCRETE PILING DETAIL
N.T.S.

THRUST BLOCK SIZE

DIAMETER OF PIPE IN INCHES	HORIZONTAL BEND: SURFACE AREA SQ. FT.	HORIZONTAL BEND: THICKNESS IN INCHES	WEIGHT AT VERTICAL BENDS -LBS.
22-1/2 BENDS			
6 or LESS	2	8	1,700
8	3	12	3,000
10	3.5	12	4,500
12	4	14	6,600
14	5	18	9,000
16	6	18	11,800
45 & 90 BENDS			
6 or LESS	6	12	6,000
8	8	15	10,700
10	10	18	16,700
12	12	18	24,000
14	18	24	32,600
16	21	24	42,700
TEES & DEAD ENDS			
6 or LESS	3	12	-----
8	4	15	-----
10	6	18	-----
12	8.5	18	-----
14	11.5	24	-----
16	15	24	-----

NOTE:
ALL VALUES SHOWN ARE MINIMUM FOR A HYDROSTATIC PRESSURE OF 150 P.S.I. AND A SOIL RESISTANCE OF 2,000 LBS. PER SQ. FT.

THRUST BLOCKS DETAILS
N.T.S.

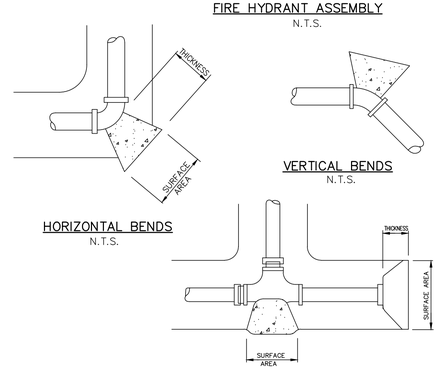

HORIZONTAL BENDS
N.T.S.

VERTICAL BENDS
N.T.S.

TEES & DEAD ENDS
N.T.S.

NOTE:
SEE THRUST BLOCK SIZE CHART FOR PROPER THICKNESS AND SURFACE AREAS

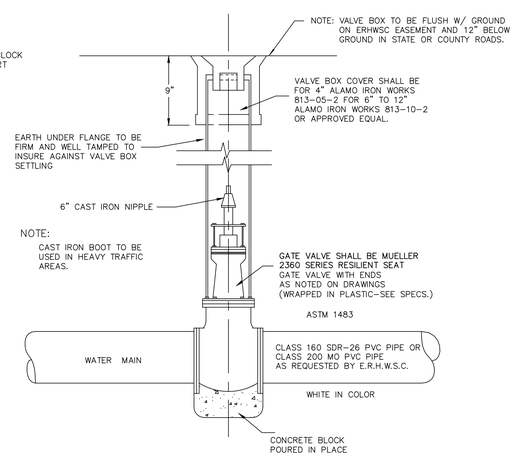

NOTE:
CAST IRON BOOT TO BE USED IN HEAVY TRAFFIC AREAS.

TYPICAL VALVE AND VALVE BOX INSTALLATION ON MAIN LINE
N.T.S.

ERHWSC STANDARD DETAILS

CAMERON COUNTY, TEXAS

ERH (H2O) WSC
East Rio Hondo Water Supply Corporation

Revision No.	Date	Description
1		

Project No.:
Issued:
Drawn By:
Checked By:
Scale:
Sheet Title
WATER DETAILS

2
Sheet Number

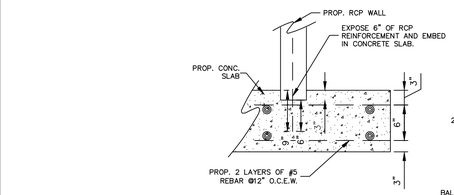

DETAIL 'B'

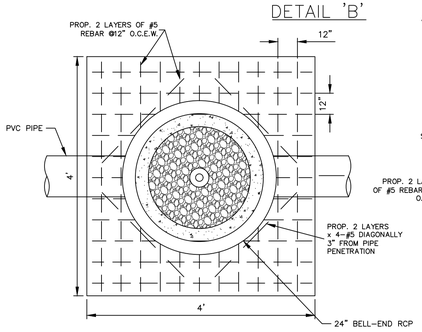

PLAN VIEW
N.T.S.

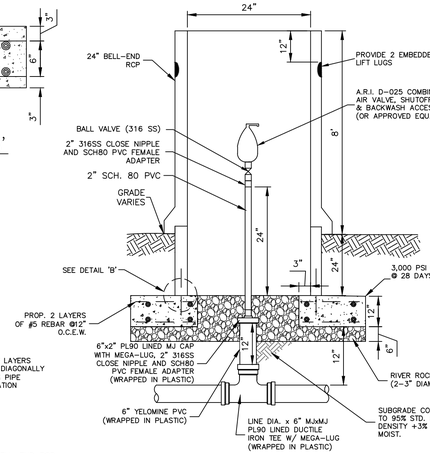

PROFILE VIEW
N.T.S.

AUTOMATIC AIR RELEASE VALVE
N.T.S.

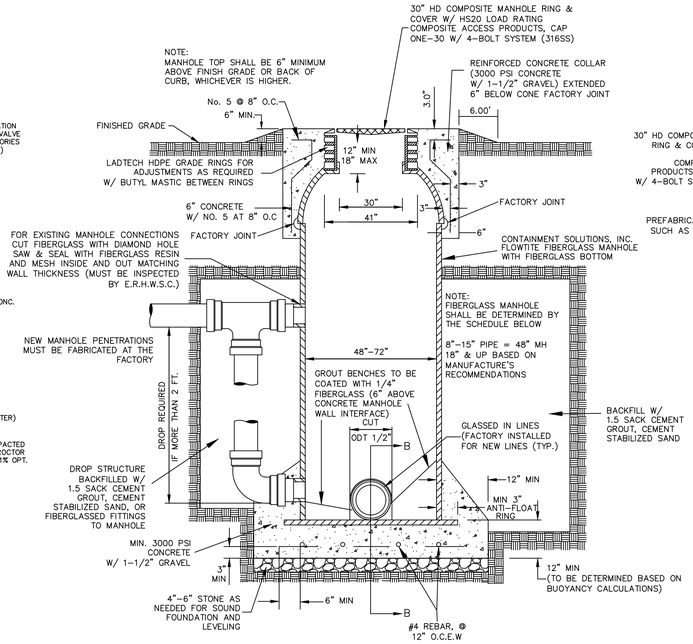

TYPICAL FIBERGLASS MANHOLE WITH DROP STRUCTURE
SECTION A-A
N.T.S.

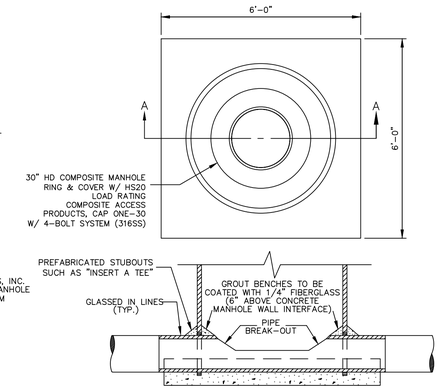

SECTION B-B
N.T.S.

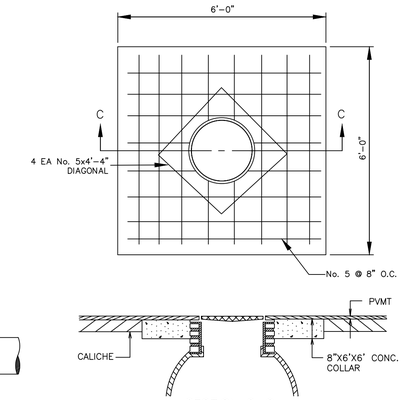

SECTION C-C
N.T.S.

TYPICAL FIBERGLASS MANHOLE IN PAVEMENT
N.T.S.

*NOTE: CONTRACTOR SHALL COORDINATE WITH INSPECTOR ON THE LOCATION OF ALL SERVICE LATERALS.

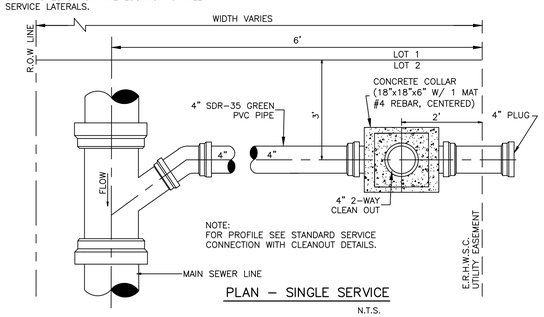

PLAN - SINGLE SERVICE
N.T.S.

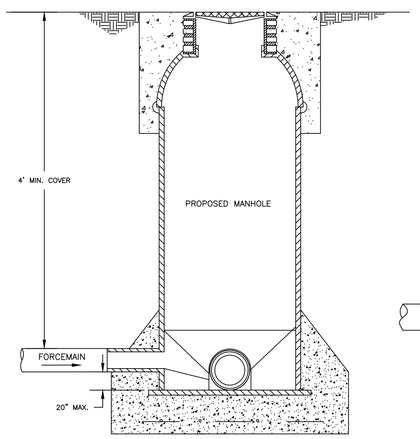

FORCEMAIN TIE-IN TO EXISTING MANHOLE
N.T.S.

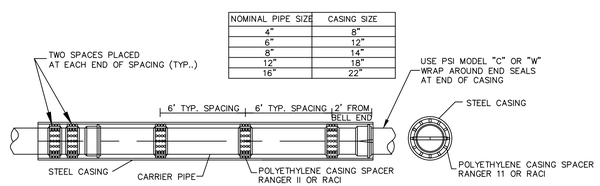

NOMINAL PIPE SIZE	CASING SIZE
4"	8"
6"	12"
8"	14"
12"	18"
16"	22"

STEEL PIPE CASING & SKIDS
N.T.S.

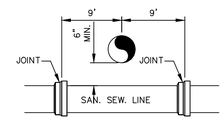

NOTE:
1. 20' ENCASEMENT REQUIRED ON WATER OR WASTEWATER UNLESS 9' SEPARATION.

2. IF SANITARY SEWER LINE CROSSED OVER A WATERLINE, THE SEWER LINE SHALL BE 150 PSI RATED ENCASEMENT IN PVC (C900-DR25) PIPE.

TYPICAL WATER & SEWER LINE CROSSING
N.T.S.

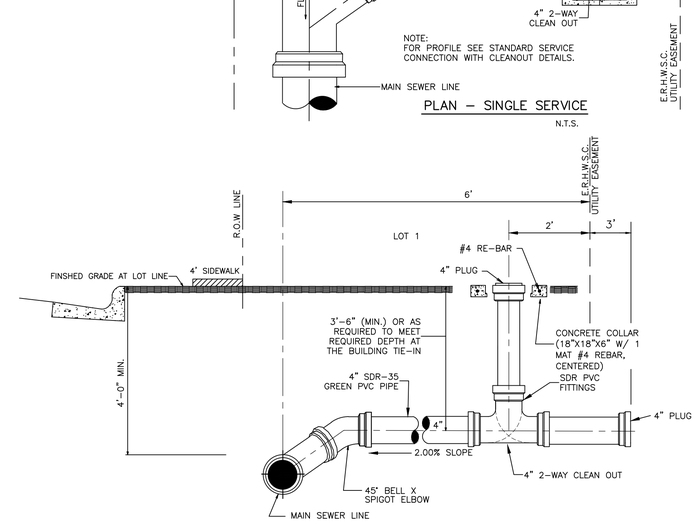

TYPICAL SHORT SERVICE CONNECTION WITH STANDARD CLEANOUT
N.T.S.

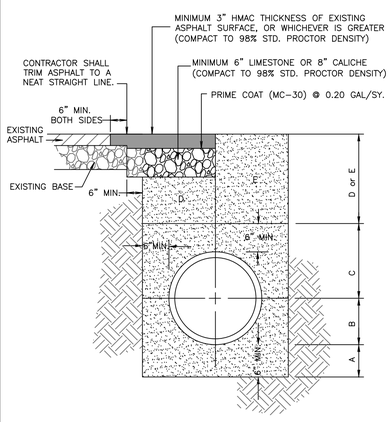

A. BANKRUN SAND BACKFILL (SP, SW OR SM AS PER ASTM D2487) PLACED BEFORE PIPE IS LAID UP TO FLOWLINE OF PIPE. (MINIMUM DEPTH OF 6")

B. BANKRUN SAND BACKFILL (SP, SW OR SM AS PER ASTM D2487) PLACED AFTER PIPE IS LAID FROM BOTTOM OF PIPE TO SPRING LINE OF PIPE AND HAND TAMPED OR WATER JETTED IN 4" LIFTS.

C. BANKRUN SAND (SP, SW OR SM AS PER ASTM D2487) PLACED FROM SPRING LINE OF PIPE TO A LEVEL OF 6" ABOVE TOP OF PIPE IN 8" LAYERS HAND TAMPED OR WATER JETTED IN.

D. BANKRUN SAND (SP, SW OR SM AS PER ASTM D2487) OR SELECT EARTH BACKFILL CLASS "A" MECHANICAL COMPACTION. (6" LIFTS) (WHERE LOCATED UNDER FUTURE PAVEMENT). COMPACTED TO 95% STD. PROCTOR DENSITY (MIN.)

E. EARTH BACKFILL CLASS "B" MECHANICAL COMPACTION. (8" LIFTS OR WATER JETTING AT 18" LIFTS WHERE NOT UNDER FUTURE PAVEMENT). COMPACTED TO 90% STD. PROCTOR DENSITY (MIN.)

F. FOUNDATION PREPARATION (WELLPOINTS, GRAVEL OR CEMENT STABILIZATION OR APPROVED SUBSTITUTE) SHALL BE REQUIRED WHEN TRENCH BOTTOM IS UNSTABLE.

NOTE:

ALL TRENCHES AND EXCAVATIONS SHALL BE BACKFILLED IMMEDIATELY AFTER PIPE IS LAID THEREIN AND UNDER NO CIRCUMSTANCE SHALL WATER BE PERMITTED TO RISE IN UNBACKFILLED TRENCHES AFTER PIPE HAS BEEN PLACED. THE CONTRACTOR SHALL PROVIDE BANKRUN SAND UP TO THE SPRING LINE AND THE REMAINING TRENCH WITH BANKRUN SAND PLACED AND COMPACTED WITH MECHANICAL TAMPERS IN EIGHT INCH (8") LIFTS WITH SUFFICIENT MOISTURE ADDED, IF NECESSARY, TO PROVIDE A DENSITY EQUAL TO THE ADJACENT UNDISTRIBUTED EARTH (95%).

STANDARD PIPE BEDDING
N.T.S.

THRUST BLOCK SIZE

DIAMETER OF PIPE IN INCHES	HORIZONTAL BEND: SURFACE AREA SQ. FT.	HORIZONTAL BEND: THICKNESS IN INCHES	WEIGHT AT VERTICAL BENDS -LBS.
22-1/2 BENDS			
6 or LESS	2	8	1,700
8	3	12	3,000
10	3.5	12	4,500
12	4	14	6,600
14	5	18	9,000
16	6	18	11,800
45 & 90 BENDS			
6 or LESS	6	12	6,000
8	8	15	10,700
10	10	18	16,700
12	12	18	24,000
14	18	24	32,600
16	21	24	42,700
TEES & DEAD ENDS			
6 or LESS	3	12	-----
8	4	15	-----
10	6	18	-----
12	8.5	18	-----
14	11.5	24	-----
16	15	24	-----

NOTE:
ALL VALUES SHOWN ARE MINIMUM FOR A HYDROSTATIC PRESSURE OF 150 P.S.I. AND A SOIL RESISTANCE OF 2,000 LBS. PER SQ. FT.

THRUST BLOCKS DETAILS
N.T.S.

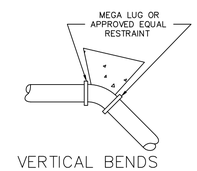

VERTICAL BENDS

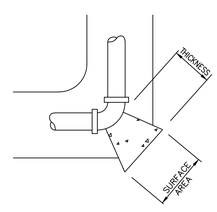

HORIZONTAL BENDS
N.T.S.

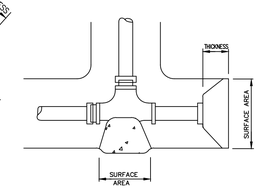

TEES & DEAD ENDS
N.T.S.

NOTE:
SEE THRUST BLOCK SIZE CHART FOR PROPER THICKNESS AND SURFACE AREAS

*NOTE: CONTRACTOR SHALL COORDINATE WITH INSPECTOR ON THE LOCATION OF ALL SERVICE LATERALS.

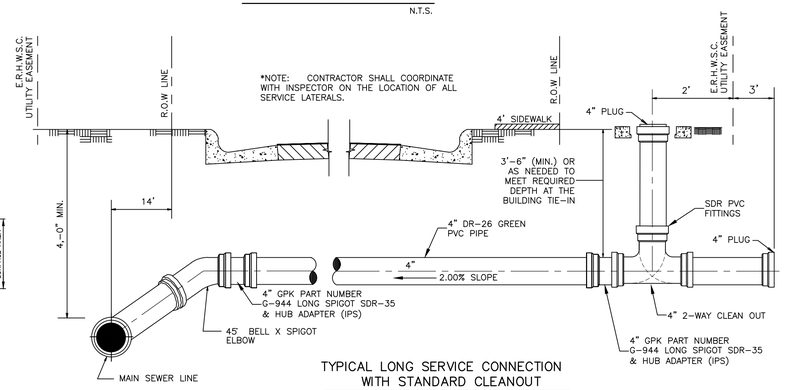

TYPICAL LONG SERVICE CONNECTION WITH STANDARD CLEANOUT
NOT TO SCALE N.T.S.

ERHWSC STANDARD DETAILS

CAMERON COUNTY, TEXAS

ERH WSC
East Rio Hondo Water Supply Corporation

Revision No.	Date	Description
1		

Project No.:
Issued:
Drawn By:
Checked By:
Scale:
Sheet Title
SANITARY SEWER DETAILS

Sheet Number 3

Apr 26, 2022 - 11:36am

C:\Users\sh379\Documents\Drawing2.dwg

NOTES:

A. IF NECESSARY PROVIDE 90° PVC PIPE TO WET WELL AND PROVIDE 90° PVC BEND AND PIPE SECTION INTO WET WELL, ATTACH PVC PIPE TO CONCRETE COVER USING 316SS "U" CLAMPS AND 316SS ANCHORS. ALL PVC PIPE, FITTINGS AND SPACERS TO BE SCH 80 THREADED.

B. ONE (1) AIR RELEASE/VENT IS REQUIRED AND ON EACH LIFT STATION DISCHARGE PIPING.

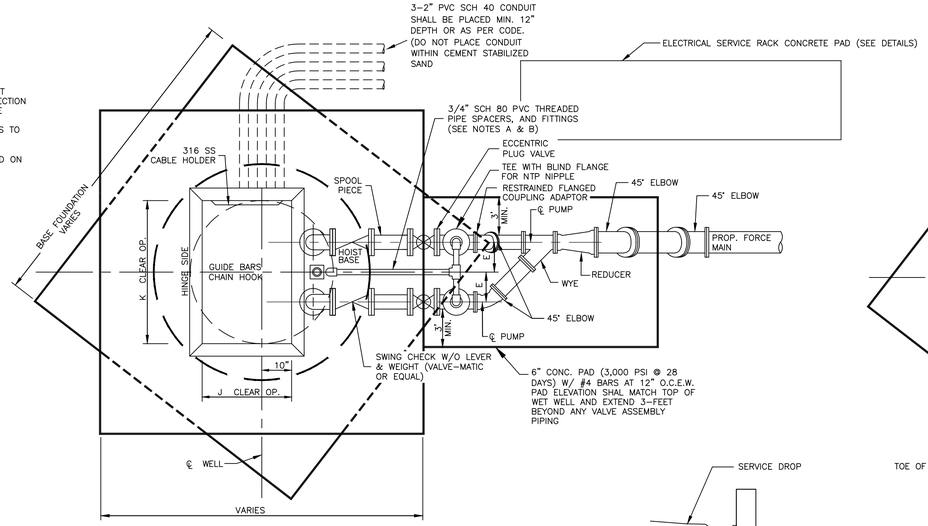

PLAN VIEW AT GRADE ELEVATION

N.T.S.

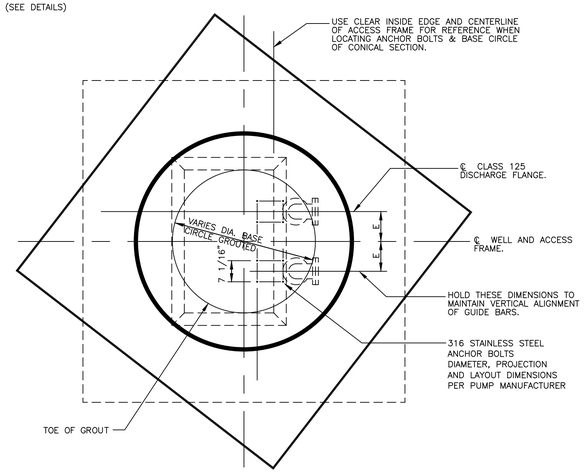

PLAN VIEW AT BASE ELEVATION

N.T.S.

SPARE PARTS LIST

LIFT STATION SPARE PUMP

E.R.H.W.S.C. SHALL BE PROVIDED WITH ONE NEW SPARE PUMP OF THE SAME MANUFACTURER AND MODEL NUMBER.

CONTROL PANEL SPARE PART LIST

A. ONE SPARE STARTER WITH OVERLOAD AND HEATERS FOR EACH SIZE PUMP.
B. TWO FLOAT SWITCHES FOR EACH TYPE USED.
C. ONE SPARE RELAY FOR EACH TYPE USED.
D. TWO SPARE FUSES OF EACH TYPE USED.
E. ONE SPARE BREAKER OF EACH TYPE USED.
F. ONE SPARE ALTERNATOR.
G. ONE SPARE PUMP BREAKER.
H. ONE SPARE OVER TEMP, SEAL FAILURE RELAY.

NOTE: SPARE PARTS REQUIRED DELIVERED TO OWNER PRIOR TO FINAL PROJECT ACCEPTANCE.

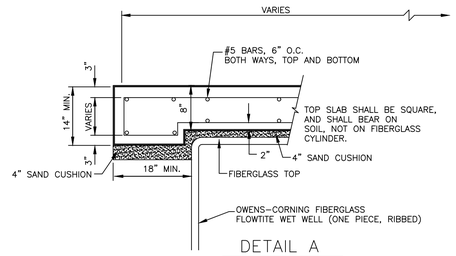

DETAIL A

N.T.S.

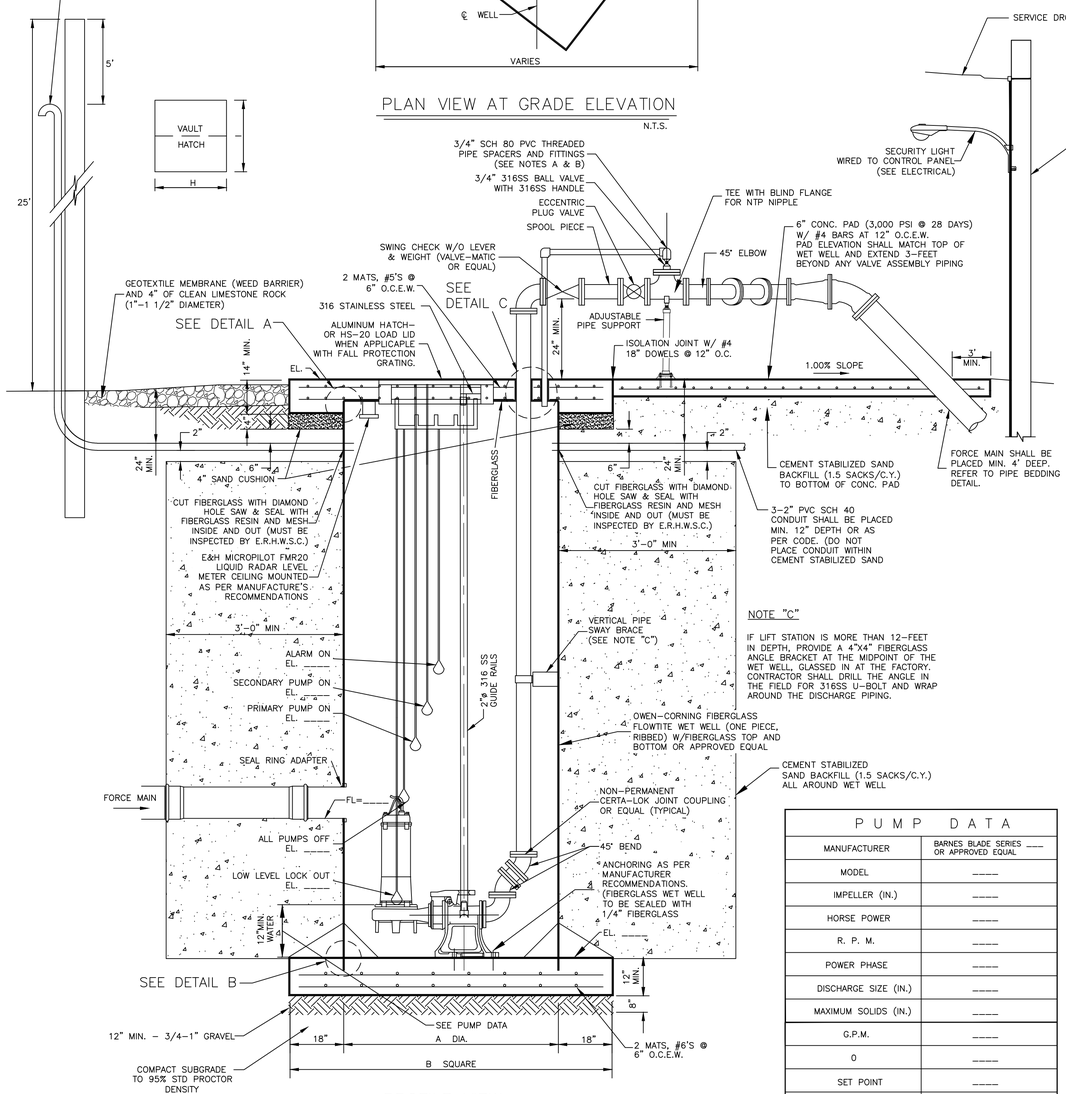

PROFILE VIEW

N.T.S.

NOTE "C"

IF LIFT STATION IS MORE THAN 12-FEET IN DEPTH, PROVIDE A 4"X4" FIBERGLASS ANGLE BRACKET AT THE MIDPOINT OF THE WET WELL, GLASSED IN AT THE FACTORY. CONTRACTOR SHALL DRILL THE ANGLE IN THE FIELD FOR 316SS U-BOLT AND WRAP AROUND THE DISCHARGE PIPING.

NOTES

1. ALL CONCRETE SHALL BE 6 SACK-4,000 PSI DESIGN. MAXIMUM WATER/CEMENT RATIO: 0.45.
2. ALL CONCRETE SHALL BE CURED A MINIMUM OF 7 DAYS. CURING SHALL CONSIST OF PLACEMENT NON-DISTURBANCE AND ONE OF THE FOLLOWING TREATMENTS OF EXPOSED SURFACES:
   A) FLOODING WITH WATER,
   B) BURLAP SACKS KEPT WET AT ALL TIMES, OR
   C) USE OF CURING COMPOUND.
3. ALL CONCRETE EDGES SHALL BE ROUNDED OR CHAMFERED 1/2".
4. ALL REBAR SHALL BE GRADE 60 AND TIED AT EACH JUNCTION, REBAR SPLICE, IF REQUIRED, SHALL HAVE A MINIMUM OF 18" OVERLAP OR 40 BAR DIAMETER, WHICHEVER IS GREATER. REBAR SHALL HAVE MINIMUM 2" CONCRETE COVER.
5. ALL VALVE VAULT PLUMBING SHALL BE FLANGED AND PIPING SHALL BE DI WITH PL90 COATING OR YELOMINE PVC.
6. EPOXY BONDING AGENT SHALL BE USED AT JOINT BETWEEN GROUT AND LOWER SLAB.
7. FIBERGLASS WET WELL BACKFILL: BACKFILL OF THE WET WELL SHALL BE PERFORMED IN MAXIMUM 6" LOOSE LAYERS WITH SAND OR SANDY MATERIAL WITH NOT MORE THAN 20 PASSING THE #200 SIEVE ACCORDING TO ASTM D1140. BACKFILL LAYERS SHALL BE COMPACTED TO 95% STANDARD PROCTOR DENSITY AT OPTIMUM MOISTURE CONTENT (TO +2%) WITH MECHANICAL TAMPERS. HEAVY EQUIPMENT SHALL NOT BE OPERATED CLOSER TO THE WET WELL THAN A DISTANCE EQUAL TO THE HEIGHT OF THE BACKFILL.
8. ALL SURFACES AND PIPING INSIDE THE WET WELL EXCEPT FIBERGLASS SURFACE, BOTTOM FLOOR, PUMPS, POWER AND CONTROL CABLES, AND THE STAINLESS STEEL GUIDE RAILS SHALL BE COATED WITH 100 POLYURETHANE. COATING SYSTEM SHALL CONSIST OF ALL THE FOLLOWING:
   A. PRIOR TO COATING, CLEAN ALL SURFACES BY WATER BLASTING WITH 10 SANDBLASTING, 100% SOLIDS, THERMOSETTING, ELASTOMERIC, UNFILLED CHEMICALLY CURED.
   B. APPLY ONE COAT OF POLIBRID 705X CONCRETE PRECOAT AT 15 MILS DFT. ACCORDING TO MANUFACTURER'S RECOMMENDATIONS, 10% MURIATIC ACID OR SAND BLASTING.
   C. APPLY ONE COAT OF POLIBRID 705 TOPCOAT AT 80 MILS DFT. ACCORDING TO MANUFACTURER'S RECOMMENDATIONS.
9. PUMP CABLE TO BE CONTINUOUS FROM SUB. PUMPS TO SEALED JUNCTION BOX PRIOR TO CONTROL PANEL.
10. A 1" WATER SERVICE AND 3/4" HOSE BIB WITH REDUCED PRESSURE PRINCIPLE BFP SHALL BE INSTALLED ON L.S. SITE.
11. ALL BOLTS INSIDE WET WELL SHALL BE 316 STAINLESS STEEL.
12. LIFT STATION SHALL BE ENCLOSED WITH SECURITY FENCE AND LOCKABLE GATE (MINIMUM 8FT HIGH VINYL COATED CHAIN-LINK).
13. FOR FINISHED SURFACE, INSTALL 4" THICK GRAVEL OR CRUSHED ROCK UPON GEOTEXTILE MEMBRANE SUPPORTED BY 2" COMPACTED BANKRUN SAND BEDDING. SLOPE GEOTEXTILE MEMBRANE TO DRAIN AWAY FROM WET WELL.

PUMP DATA

MANUFACTURER	BARNES BLADE SERIES ---- OR APPROVED EQUAL
MODEL	----
IMPELLER (IN.)	----
HORSE POWER	----
R. P. M.	----
POWER PHASE	----
DISCHARGE SIZE (IN.)	----
MAXIMUM SOLIDS (IN.)	----
G.P.M.	----
O	----
SET POINT	----
MAX FLOW	----

MIN. DIMENSIONS

DIMENSIONS	4" DISCHARGE	6" DISCHARGE	8" DISCHARGE
A	72"	96"	120"
B	108"	144"	168"
C	12"	12"	15"
D	4"	6"	8"
E	15"	18"	22"
F	60"	72"	84"
G	60"	84"	102"
H	48"	60"	72"
I	48"	72"	90"
J *	36"	36"	42"
K *	54"	60"	72"

* VERIFY WITH PUMP DIMENSIONS

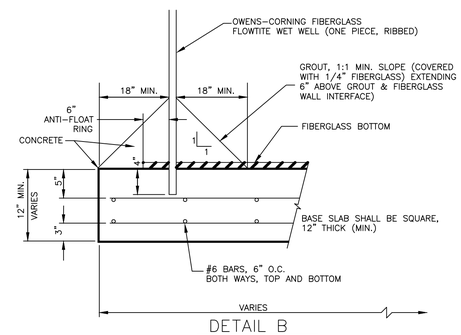

DETAIL B

N.T.S.

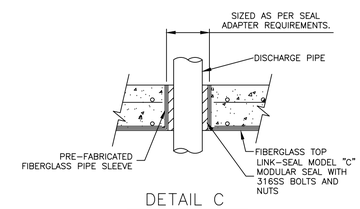

DETAIL C

N.T.S.

PIPE SIZE	HOLE RADIUS	FLG PLATE	THRD STUD	CUP ID	BASE PLATE	EXTENSION PIPE SIZE REQ'D NOTE 1	ANCHOR BOLT HOLE DIAMETER NOTE 2
3"	3.00"	.250"	1"x6"	2.5"	4"x6"x1/2"	2"	9/16"
4"	3.75"	.250"	1"x6"	2.5"	4"x6"x1/2"	2"	9/16"
6"	4.75"	.250"	1"x6"	2.5"	4"x6"x1/2"	2"	9/16"
8"	5.87"	.250"	1"x6"	2.5"	4"x6"x1/2"	2"	9/16"
10"	7.125"	.250"	1"x6"	2.5"	4"x6"x1/2"	2"	9/16"
12"	8.50"	.250"	1"x6"	2.5"	4"x6"x1/2"	2"	9/16"
14"	9.375"	.375"	1.5"x6"	3.5"	8"x8"x1/2"	3"	3/4"
16"	9.625"	.375"	1.5"x6"	3.5"	8"x8"x1/2"	3"	3/4"
18"	11.375"	.375"	2"x6"	4.5"	12"x12"x5/8"	4"	3/4"
20"	12.50"	.375"	2"x6"	4.5"	12"x12"x5/8"	4"	3/4"
24"	14.75"	.375"	2"x6"	4.5"	12"x12"x5/8"	4"	3/4"

NOTES:
1. MAXIMUM 4" LONG
2. ANCHOR BOLT EMBEDMENT PER BOLT MANUFACTURER
3. ALL SUPPORT MATERIAL SHALL BE 304SS

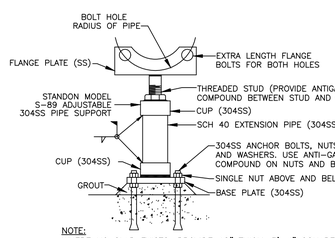

NOTE:
WHERE NO SLAB EXISTS, PROVIDE 18" THICK, 3'-4" SQUARE, CONCRETE PAD WITH 4-#4 REINFORCING BARS, EQUAL SPACED, EACH WAY, TOP AND BOTTOM. SET TOP OF PAD 3" ABOVE FINAL GRADE.

PIPE SUPPORT DETAIL

N.T.S.

ERHWSC STANDARD DETAILS

CAMERON COUNTY, TEXAS

ERH WSC
East Rio Hondo Water Supply Corporation

Revision		
No.	Date	Description
1		

Project No.:
Issued:
Drawn By:
Checked By:
Scale:
Sheet Title
LIFT STATION DETAILS

4
Sheet Number

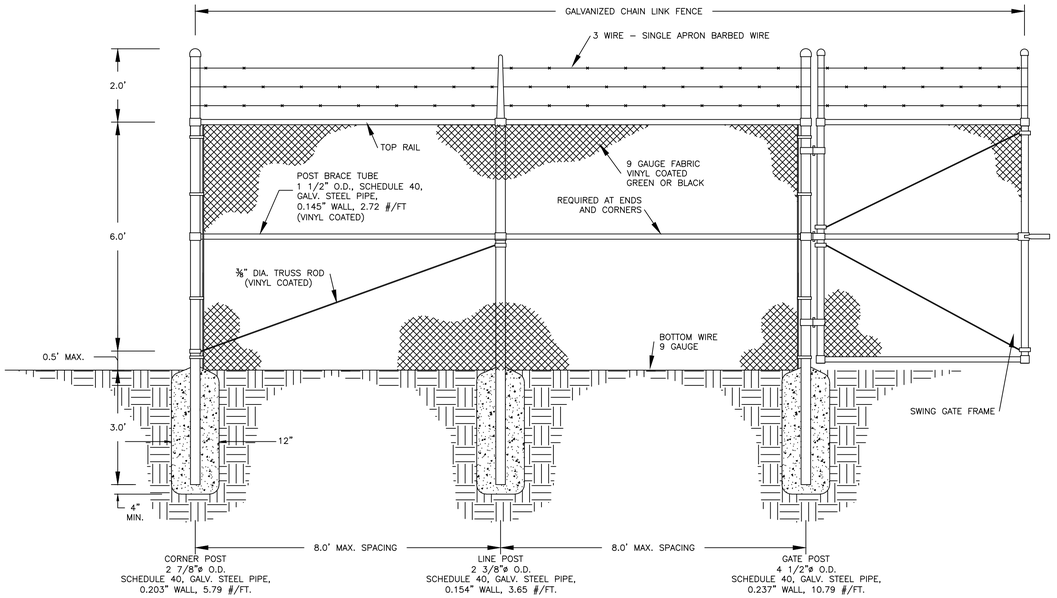

LIFT STATION FENCE DETAIL

N.T.S.

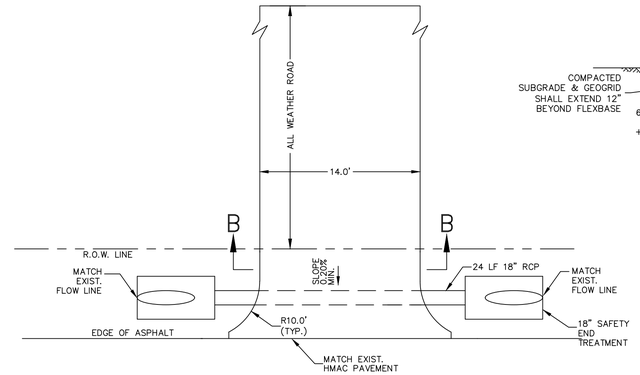

TYPICAL LIFT STATION DRIVEWAY APRON

N.T.S.

NOTE: CONTRACTOR TO VERIFY LOCAL DRAINAGE PATTERNS TO AVOID CREATING PONDING WATER.

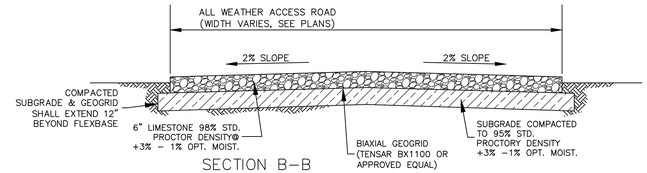

SECTION B–B

N.T.S.

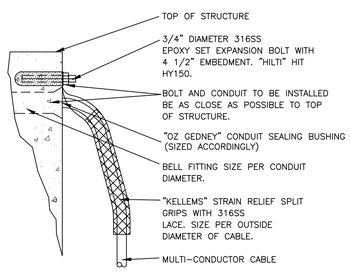

TYPICAL CABLE GRIP

N.T.S.

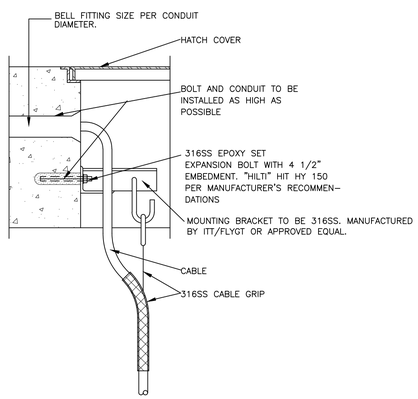

TYPICAL LEVEL & FLOAT LIFTING ASSEMBLY

N.T.S.

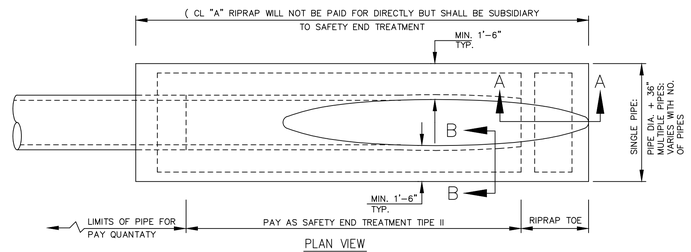

PLAN VIEW

NOT TO SCALE

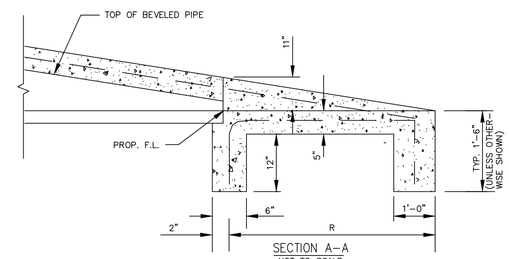

SECTION A–A

NOT TO SCALE

SAFETY END TREATMENT PIPE LENGTHS

PIPE DIA. (IN.)	"L"			
	3d	4d	5d	6d
12'	2'–0"	2'–8'	3'–4"	4'–0"
15"	2'–10"	3'–9"	4'–8'	5'–7 1/2'
18'	3'–7 1/2"	4'–10"	6'–0 1/2"	7'–3"
24"	5'–1 1/2"	6'–10 1/2"	8'–7"	10'–4'
30"	6'–10 1/2"	9'–2"	11'–5 1/2"	13'–9"
36"	8'–6"	11'–4'	14'–2'	17'–0"
42"	10'–1 1/2"	13'–6"	16'–10 1/2"	20'–3"
48"	11'–9"	15'–8"	19'–7"	23'–6"

ESTIMATED RIPRAP CL "A" VOLUME (CY)

PIPE DIA. (IN.)	SLOPE "S"			
	3d	4d	5d	6d
12'	.88	1.11	1.34	1.57
15"	.98	1.23	1.49	1.75
18'	1.08	1.36	1.64	1.93
24"	1.29	1.63	1.97	2.32
30"	1.50	1.91	2.32	2.73
36"	1.73	2.21	2.69	3.17
42"	1.95	2.50	3.05	3.60
48"	2.18	2.80	3.42	4.05

FOR CONTRACTORS INFORMATION ONLY (SINGLE PIPE)

RIPRAP TOE LENGTHS "A"

SLOPE	"R"	"A"
3d	2'–9"	1'–9"
4d	3'–8"	2'–1"
5d	4'–7"	2'–11"
6d	5'–6"	3'–6"

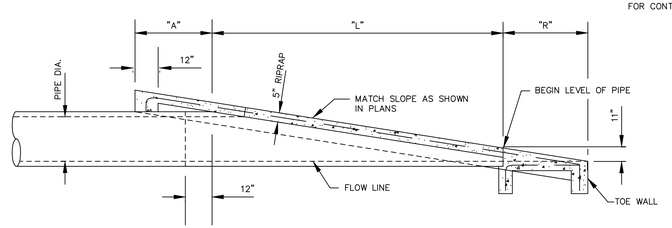

ELEVATION SAFETY END TREATMENT (TYPE II)

NOT TO SCALE

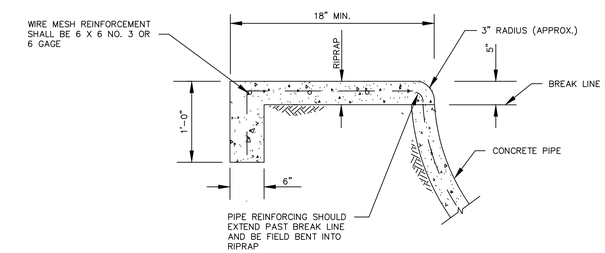

SECTION B–B

NOT TO SCALE

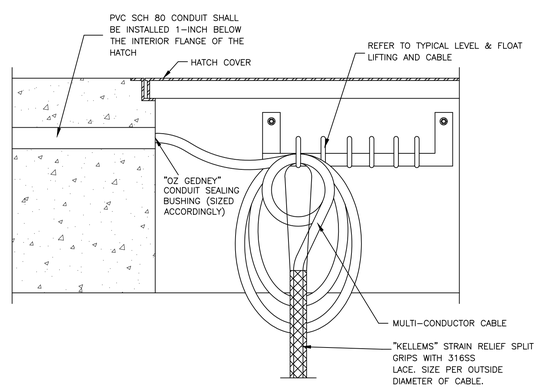

TYPICAL HATCH COVER CONDUIT PENETRATION

N.T.S.

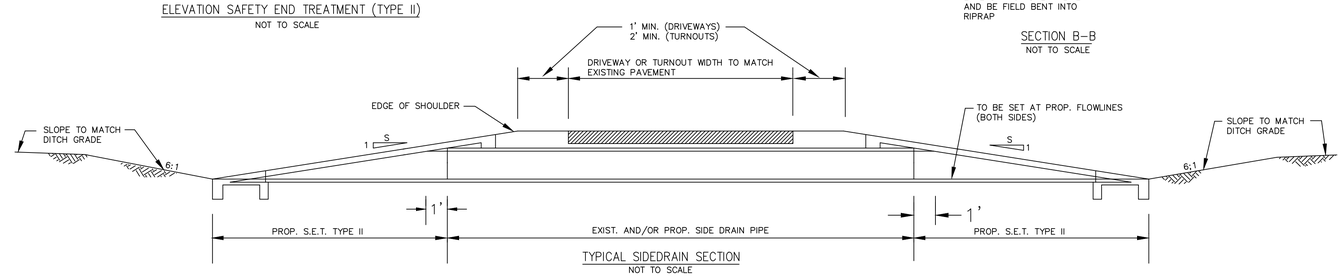

TYPICAL SIDEDRAIN SECTION

NOT TO SCALE

SAFETY END TREATMENT DETAILS

NOT TO SCALE

ERHWSC STANDARD DETAILS

CAMERON COUNTY, TEXAS

ERH WSC
East Rio Hondo Water Supply Corporation

Revision No.	Date	Description
1		

Project No.:
Issued:
Drawn By:
Checked By:
Scale:
Sheet Title
LIFT STATION SITE DETAILS

5
Sheet Number

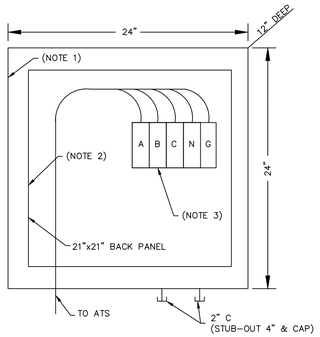

NOTE 1. THE LUG ENCLOSURE SHALL BE 24"W X 24"H X 12"D WITH A 21"W X 21"H BACK PANEL, QUICK DISCONNECT DOOR LATCHES, RATED NEMA-4X 316SS.

NOTE 2. THREE POLE POWER DISTRIBUTION BLOCK.

NOTE 3. TWO POLE POWER DISTRIBUTION BLOCK.

GENERATOR LUG PANEL DETAIL

N.T.S.

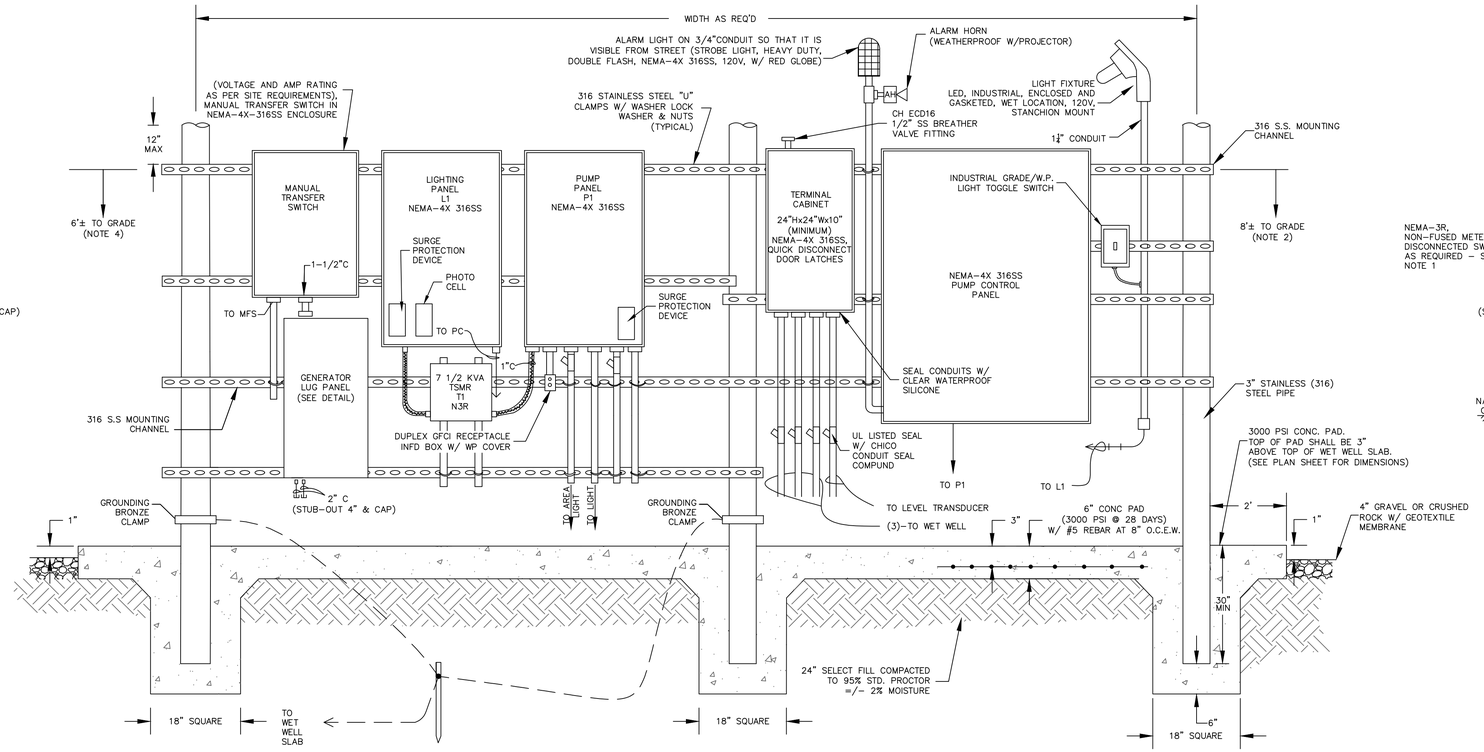

ELECTRICAL SERVICE RACK ELEVATION

N.T.S.

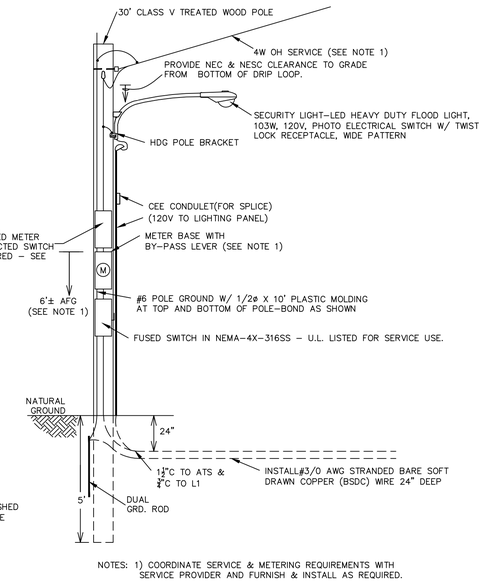

NOTES: 1) COORDINATE SERVICE & METERING REQUIREMENTS WITH SERVICE PROVIDER AND FURNISH & INSTALL AS REQUIRED.

PROPOSED SERVICE POLE DETAIL

N.T.S.

GENERAL REQUIREMENT NOTES:

A. ELECTRICAL/CONTROL PANELS SHALL BE UL508A CERTIFIED.

B. NEW PUMP CONTROL PANELS SHALL HAVE AN INTERIOR FRONT SWING DOOR WHERE ALL CONTROL PUSHBUTTONS AND SWITCHES ARE MOUNTED.

C. COLOR DESIGNATION:
- GREEN: STOPPED/CLOSED; OFF
- RED: RUNNING/OPEN; ON
- AMBER: ALARM
- WHITE: CABINET POWER

D. PROVIDE WITH ISOLATED I/O.

E. UTILIZE TYPE 316 STAINLESS STEEL (316SS) FOR ALL HARDWARE AND SUPPORTS INSTALLED OUTDOORS.

F. ALL CONDUIT PENETRATIONS IN ENCLOSURES INSTALLED OUTDOORS SHALL BE BOTTOM ENTRY EXIT. TOP OR SIDE ENTRY CONDUITS ARE NOT ALLOWED. EXCEPTIONS MAY BE MADE TO SIDE ENTRY CONDUITS IN THE LOWEST 12"-18" OF THE ENCLOSURE, BELOW CONTACTORS AND LIVE CONTROL EQUIPMENT.

G. UTILIZE ALUMINUM BACK PANELS IN ALL CONTROL PANELS AND TERMINATION JUNCTION BOXES.

MAINTAIN NEC 404.8(A) ACCESSIBILITY TO SWITCHES & PANELS.
H. MAINTAIN NEC 110.26 CLEAR WORKING SPACE ABOUT ELECTRICAL ENCLOSURES.

I. INSTALL C.T.S. (FURNISHED WITH PC) IN PANEL P1.

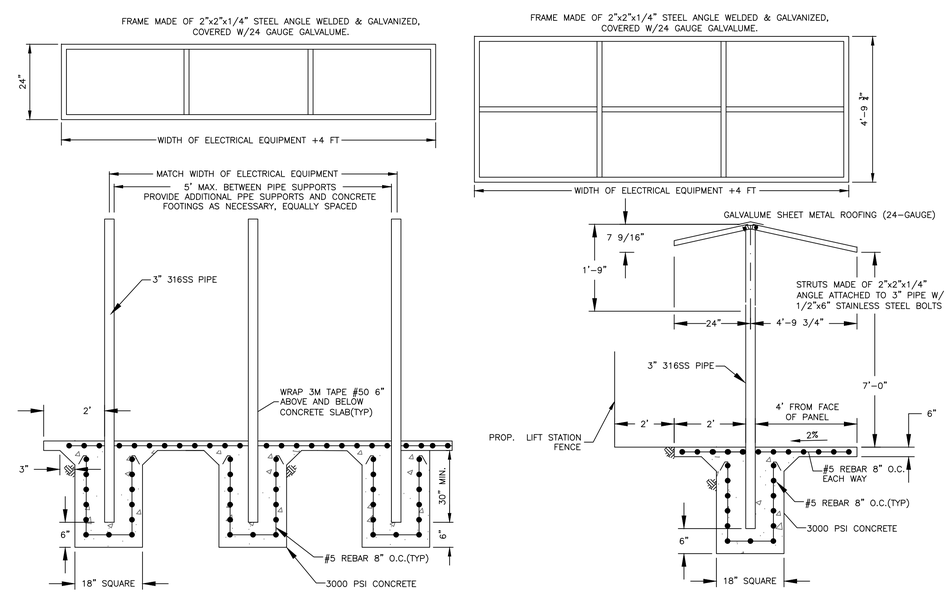

NOTE:
1) ALL FABRICATED STEEL COMPONENTS SHALL BE HOT DIPPED GALVANIZED AFTER FABRICATION. ALL FASTENERS SHALL BE STAINLESS STEEL.

TYPICAL RACK SUPPORT & ROOFING DETAIL

NOT TO SCALE

ERHWSC STANDARD DETAILS

CAMERON COUNTY, TEXAS

ERH WSC
East Rio Hondo Water Supply Corporation

Revision No.	Date	Description
1		

Project No.:	
Issued:	
Drawn By:	
Checked By:	
Scale:	
Sheet Title	LIFT STATION DETAILS
Sheet Number	6